FCTUC FACULDADE DE CIÊNCIAS E TECNOLOGIA
UNIVERSIDADE DE COIMBRA

DEPARTAMENTO DE ENGENHARIA MECÂNICA

Design and specification of a Particle Doppler Velocimeter for shock and detonation wave characterisation

Submitted in Partial Fulfilment of the Requirements for the Degree of Integrated Master in Mechanical Engineering in the speciality of Production and Project

Design e especificação de um Particle Dopple Velocimeter para caracterização de ondas de detonação e choque

Author

João Filipe Teixeira Anacleto Lopes Rodrigues

Advisors

Doctor José Manuel Baranda Moreira da Silva Ribeiro
Doctor William G. Proud

Jury

President	**Professor Doutor Miguel Rosa Oliveira Panão** **Professor Auxiliar da Universidade de Coimbra**
Vowels	**Professor Doutor José Manuel Baranda Moreira da Silva Ribeiro** **Professor Auxiliar da Universidade de Coimbra** **Professor Doutor Ricardo António Lopes Mendes** **Professor Auxiliar da Universidade de Coimbra**

Institutional Collaboration

Imperial College London

Institute of Shock Physics

Coimbra, September 2018

ACKNOWLEDGEMENTS

The following work presented, and the experience gained throughout the whole process, would have not been possible without the support of several people, to which I show my gratitude.

To Dr. William G. Proud and Dr. José Baranda Ribeiro for the opportunity given to carry out my Master's thesis at the Institute of Shock Physics at the Imperial College of London, for the support and guidance given during my stay and their availability to help me and offer their valuable input.

To Dr. Gareth Tear for the possibility to work and get some practical experience with a PDV system and its components, as well as explaining several concepts of this technique and showing me how to connect the requirements to the selection of the equipment and PDV configuration.

To Dr. Simon Bland for sharing his knowledge and expertise of PDV systems to guide me through the process of selecting an adequate design for my project.

To Dr. James Perry for his invitation to meet at the University of Cambridge and showing me the facilities and their PDV system and explaining its functioning and how I could apply it to my design.

To Dr. David Sory for his support when I was stuck in a setback and for giving me perspective key to succeeding in my project.

To my father, Vitor Rodrigues, a special thank for all the encouragement, for being understanding during this phase and for giving me all the tools needed to finish this step successfully.

To my mother, Marta Anacleto, for her emotional support and reassurance.

Finally, I would like to specially thank my family and friends for all the support and energy that they gave me during these 5 months in England.

Abstract

Interferometry is the main metrology technique applied in shock physics. The detonation and particle velocities measured with nanosecond resolution provide accurate results used for the calculation of key parameters to characterise the detonation shock wave. Particle/Photon Doppler Velocimetry (PDV) is a more affordable, easier to operate fibre optics interferometer than its predecessors, used for both low and high velocity experiments.

This work was comprised to propose a PDV design for the University of Coimbra. The configuration of the PDV and the specification of its components is defined and thoroughly justified. The PDV design is based on requirements defined by the intended applications (explosive welding, cylinder and flyer plate tests for explosives characterisation) and research published on other PDV systems. The data analysis technique is also discussed as to obtain the maximum time-velocity resolution trade-off and select the appropriate window function of the Fourier transform algorithm. The gained practical experience is described and the used PDV detailed, along with the laser calibration. Annexes summarise the PDV design, account for expected power losses of each component and provide an estimated budget for a two channel PDV for the same application.

The PDV design is severely hindered economically by the oscilloscope. The type of fibre end is too dependent on practical aspects of the experiments to provide a final response. The PDV design is prepared to measure particle velocities up to 4 km/s accurately with nanosecond resolution. This work is written as a guide for any type of generation one PDV design, starting from the general selection process to indicating the specifications of each component for the previously established requirements.

Upshifted PDV and multiplexing PDV are recommended as possible upgrades of the system, coinciding with current state of the art.

Keywords Particle Doppler Velocimetry, Photon Doppler Velocimetry, Interferometry, Shock Physics, Explosive testing, Fibre Optics Technology.

Resumo

Interferometria é a principal técnica de metrologia aplicada em física de choque. Velocidades de detonação e de partícula, medidas com resolução nanométrica, proporcionam resultados precisos utilizados para o cálculo de parâmetros chave para a caracterização da onda de detonação de choque. Particle/Photon Doppler Velocimetry (PDV) é um interferómetro de fibra ótica mais económico e de fácil uso, em relação aos seus predecessores. É utilizado para aplicações de tanto baixa como alta velocidade.

Este trabalho engloba um design de PDV para a Universidade de Coimbra. A configuração do PDV e a especificação dos seus componentes é definido e minuciosamente justificado. O design do PDV é baseado em requerimentos definidos pelas aplicações desejadas (soldadura por explosão, testes de aceleração de placas planas e cilíndricas para caracterização de explosivos) e pela investigação de outros PDV publicada. A técnica de análise de dados é discutida com o objetivo de obter a melhor relação resolução de velocidade e temporal e com a escolha mais apropriada de window function para o algoritmo de transformada de Fourier. A experiência prática é descrita, juntamente com o PDV utilizado e a sua calibração. Os anexos resumem o design PDV, considera as perdas óticas previstas em cada componente e proporcionam uma estimativa de custo para um PDV de dois canais para a mesma aplicação.

O design de PDV é severamente afetado economicamente pelo osciloscópio. O tipo de fibre end é demasiado dependente em aspetos práticos das experiências desejadas para dar uma resposta final. O design mede velocidade até 4 km/s com resolução de nanossegundos. Este trabalho é composto como um guia para qualquer tipo de PDV de geração um, iniciando em um contexto geral de seleção de componentes até à especificação baseada nos nossos requisitos.

Upshifted PDV e multiplexing PDV são recomendados como possíveis evoluções do sistema, coincidindo com o atual estado da arte.

Palavras-chave: Particle Doppler Velocimetry, Photon Doppler Velocimetry, Interferometria, Física de Choque, Teste de Explosivos, Tecnologia de Fibra Ótica.

Contents

LIST OF FIGURES

LIST OF TABLES

SYMBOLOGY AND ACRONYMS

Symbology

λ – Wavelength

λ_0 – Wavelength from reference/light source signal

σ – Noise fraction in a signal

τ – Delay time; Time scale/resolution

τ_{coh}– Coherence time of the laser

Φ – Phase

Φ_0– Phase from the reference/light source signal

Φ_d– Phase from the Doppler-shifted signal

a – Fibre optic's core diameter

BD – Beam diameter of a lens

c – Speed of light in vacuum

C – Mass of the explosive charge in cylinder test

E_G – Gurney energy

f – Peak frequency of the time window

f' – Focal length of a lens

f_0 – Frequency of light source

f_1 – Frequency of original laser (generation three PDV)

f_2 – Frequency of second, tuneable laser (generation three PDV)

f_D, f_d – Frequency of Doppler-shifted light

f_B – Beat frequency

Δf – Frequency resolution

G_{dB} – Gain/Optical power ratio on the decibel scale

i – Image distance/Initial stand-off of a lens

$I(t)$ – Irradiance measured at the photodetector

$I_0(t)$ – Irradiance of the reference signal

$I_d(t)$ – Irradiance of the Doppler-shifted signal

L_{coh} – Coherence length of the laser

M – Mass of the metallic confinement in cylinder test

MF – Magnification factor of a lens

N – Number of collected samples from the oscilloscope

NA – Numerical aperture of a lens

NOF – Number of fringes

o – Object image of a lens/Length of a probe

P_{meas} – Optical power measured (at the output)

P_{ref} – Optical power as reference (at the input)

RL – Record length of an oscilloscope

$s(t)$ – Short Time Fourier Transform's signal's voltage

$S(f,t)$ – Short Time Fourier Transform's frequency-time signal response

SD – Spot diameter of a lens

SF – Sampling rate/frequency of an oscilloscope

T – Period of a wave

u, u_p – Velocity of particle, velocity of target's surface

U_s – Shock velocity, detonation velocity

V_d – Velocity of the detonation in explosive welding

V_p – Flyer plate's impact velocity in explosive welding

$v_{observer}$ – Velocity of the observer (Doppler effect)

v_{source} – Velocity of the source (Doppler effect)

v_w – Wall velocity in cylinder test

Δv – Linewidth of the laser; Velocity resolution

$w(t)$ – Short Time Fourier Transform's window function

Δx – Displacement of the sample's surface

Acronyms

AR – Anti-reflective

APC - Angled polished connection

AOFS – Acousto-optic Frequency Shifter

CW – Continuous Wave

DEM – Department of Mechanical Engineering

FBT – Fused Bionic Taper

FC – Ferrule fibre connector

FCTUC – Faculty of Science and Technology of the University of Coimbra

FFT – Fast Fourier Transform

FWHM – Full Width at Half Maximum

FT – Fourier Transform

GRIN – Gradient Index

HE – High explosive

HetV – Heterodyne Velocimetry

IR – Infrared

ISP – Institute of Shock Physics

LD – Laser diodes

LLNL – Lawrence Livermore National Laboratory

MMF – Multi-mode fibre

MPDV – Multiplexing Particle/Photonic Doppler Velocimetry

MTP/MPO – Multi-fibre connector

NQ – Non-quantifiable

OPL – Optical Path Length

PD – Photodetector

PDV – Particle Doppler Velocimetry, Photonic Doppler Velocimetry

PLC – Planar Lightwave Circuit

Q – Quantifiable

SMF – Single mode fibre

SNR – Signal to noise ratio

STFT – Short Time Fourier Transform

UK – United Kingdom

VISAR – Velocity Interferometer System for Any Reflector

VOA – Variable Optical Attenuator

1. INTRODUCTION

Understanding the dynamic response of materials undergoing extreme solicitations is a broad field of study within applied physics and engineering. Its proper study has direct applications in many industry sectors. Being able to characterise the behaviour of materials subjected to explosions and impact improves the understanding of those events and creates opportunities for new solutions by applying those conditions in a controlled manner.

The strain rates, accelerations in the material, pressure increase will occur in an extremely short amount of time, which requires measuring techniques that can measure rates of change of such properties at a microsecond, nanosecond scale. Those measuring techniques should also be non-intrusive, therefore superficial and not in-material.

Particle Doppler Velocimetry (PDV), also known as Photonic Doppler Velocimetry or Heterodyne Velocimetry (HetV), is a diagnostics technique, namely a displacement interferometer, developed in 2004 by the Lawrence Livermore National Laboratory (LLNL) (Strand, O. T., et al. 2004) . It is based on previous optical techniques such as the Michelson interferometer and more recently the Velocity Interferometer System for any Reflector (VISAR) (Barker, L., Hollenbach, R., 1972).

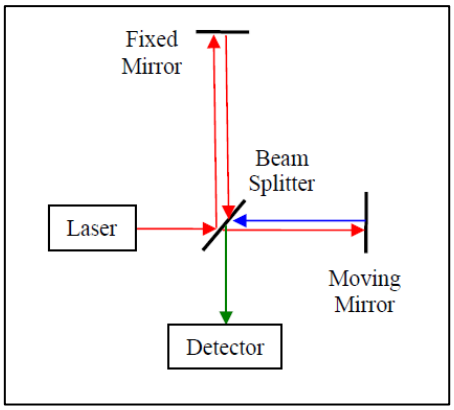

Figure 1.1. Michelson interferometer. The beam splitter creates two separate beams, the mirrors define the length of each arm and consequent interference fringe pattern (Holtkamp, D., 2006).

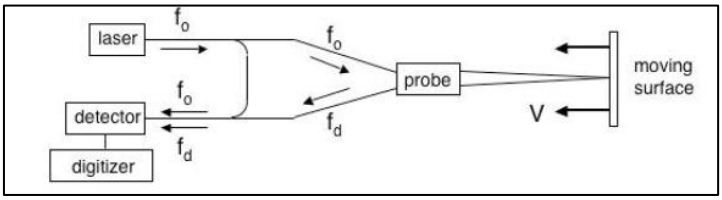

Figure 1.2. First proposal for a PDV system (generation zero configuration) and its optical path (Strand, O. T., et al. 2004).

PDV is used in research pertaining to shock physics phenomena characterised by a sudden increase in velocity over an extremely short period of time. This technique presents advantages such as the use of monochromatic laser (Light Amplification by the Stimulated Emission of Radiation) as the light source compared to visible light (in the Michelson interferometer and VISAR), the use of optical fibre as the medium of travel of light compared to air (free space optics) in the case of VISAR, and the use of more affordable components in comparison, due to their mainstream use in the telecommunications industry since the beginning of the 21st century.

1.1. Objectives

The objective of this work is to define the parameters and the configuration of a PDV system for the Department of Mechanical Engineering of the University of Coimbra (DEM/FCTUC) to be used for the applications presented in subsection 1.2. Obtaining a velocity history of the material's response to the detonation process will either allow the characterisation of that process or provide valuable information to calculate other variables that are not easily measured or can't be measured by a non-intrusive technique.

Upon defining the design of the PDV system and its configuration in this work, a personalised budget can be planned, and the system can be assembled.

1.2. Applications of DEM/FCTUC's PDV system

1.2.1. Explosive Welding

Explosive welding is a solid-state welding process (temperature below melting point) where metal joining is achieved by a high-speed impact between two metallic plates,

caused by a controlled detonation of an explosive. High pressure promotes plastic deformation, forming a mechanical bond between the joined materials. Metallurgically incompatible metals can be joined, and generally welds are achieved without defects common in fusion welding processes, such as non-metallic inclusions and cracks.

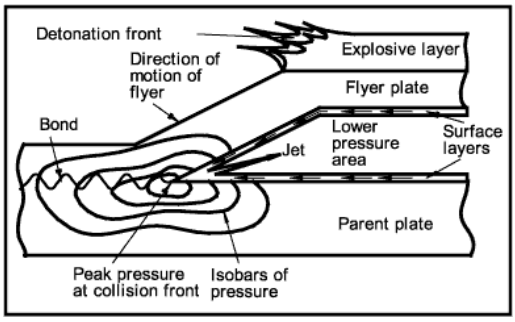

Figure 1.3. Dynamic behaviour of an explosive welding detonation, under a lap joint configuration for two metallic plates (Howes, T., 2001)

The process, for each combination of metals to be joined, their geometries and type of joint, is characterised by: the collision angle between clad/flyer and base/parent metal; the space between plates; the type and amount of explosive. Studying the explosive welding process and its controlled detonation means the detonation can be manipulated to achieve maximum efficiency, according to the requirements. A full characterisation of the material's dynamic response is necessary. The detonation velocity (V_d) directly affects the dynamic behaviour in the interface and the geometry of the resulting weld, since the interface presents fluid-like characteristics in that region during the detonation. Different interfaces offer advantages for different solicitations (Mendes, R., Ribeiro, J. B., Loureiro, A., 2013).

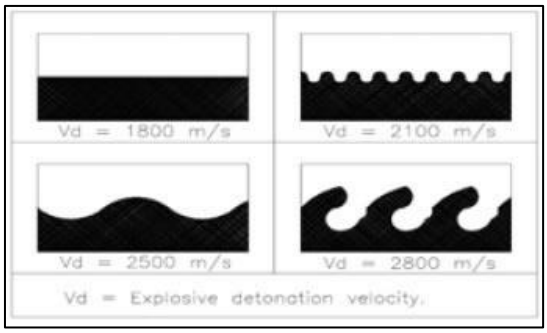

Figure 1.4. Effect of detonation velocity on the interface's geometry. A wavy interface presents a higher resistance to shear strength. Each interface affects mechanical properties and how the weld performs under different solicitations (Pacareo, 2018)

Values for the flyer plate's impact velocity (V_p) in explosive welding can range from subsonic values (Findik, F., 2011) to velocities up to 1 km/s for Aluminium to aluminium welding (Zhang, Y. et al., 2010).

PDV can non-intrusively obtain velocity profiles of this type of high speed manufacturing process at an economic cost and high temporal resolution. Characterisation of the detonation process is done and compared with the existing theoretical models (Findik, F., 2011), so the parameters that define each explosive welding setup can be linked to the desired outcome of the joined metals.

1.2.2. Characterisation of explosives

The sudden energy release showcased by a detonation is manifested by pressure and velocity spikes. For high explosives (HEs), the velocities of the shock front (caused by the detonation process) surpasses supersonic levels. The velocity imparted on the surrounding particles/objects (such as metallic plates) also exceed supersonic levels, and speeds up to 4 km/s have been documented for particle velocities in HE detonations (Deal, W., 1957; Gustavsen, R. et al., 1998).

HMX-based explosives are HEs mostly applied for military and aerospace purposes. VISAR has served as a possibility for measuring particle velocities of liner materials from which detonation wave profiles can be assessed (Gustavsen, R. et al., 1998), however PDV is a more cost-effective solution for studying the same velocity history.

The denotation of a parallelepiped or cylindrical charge can be characterised by measuring the speed and the acceleration process of a polymeric or metallic foil's surface. The foil is accelerated due to the shock wave that is induced by the detonation wave. A PDV probe can be placed close to the foil's surface to obtain speed measurements with a sampling frequency and time resolution high enough to faithfully describe features such as the Chapman-Jouguet point and the Von Neumann spike.

The Chapman-Jouguet point or condition represents a state of chemical and thermal equilibrium during the detonation process of the shock/reaction front, where a consequent decrease in pressure is observed. The Von Neumann spike indicates a sudden increase in pressure at the shock front, caused by the compression of the material by a shock wave which sets the initial stage of an exothermic chemical reaction of the detonation products. The parameters related to these features can be calculated using known

characteristics of the material (its thickness and the medium of shock wave propagation) and the velocity profile obtained from a PDV channel., based on the theory of shock physics.

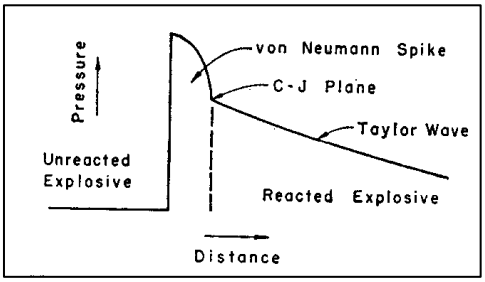

Figure 1.5. Simplified pressure profile of a detonation wave, identifying the Von Neumann spike and CJ point (Deal, W., 1957)

A set of PDV probes can also measure, in strategic points, velocities of a copper or brass sheet confinement/wall in a cylindrical explosive charge, in what is called as a cylinder test. These measurements provide information that can be compared to existing theoretical approaches and used to calculate the released kinetic energy (or Gurney energy) of the detonation. PDV has been used to calculate wall velocities (Künzel, M., et al., 2015) and also the released energy by the detonation products (Robbins et al. 2014; Jackson 2014).

$$\frac{v_w}{\sqrt{2E_G}} = \left[\frac{M}{C} + \frac{1}{2}\right]^{-1/2}. \tag{1.1}$$

For the calculation of the wall velocity v_w, E_G is the Gurney energy, M and C the mass of the metallic confinement and the explosive charge, respectively, with its ratio referred to as the loading factor. Knowing the maximum velocity of the wall, the Gurney energy (kinetic energy per unit of explosive mass), the equation can be solved also as:

$$E_G = \frac{{v_w}^2}{2}\left[\frac{M}{C} + \frac{1}{2}\right]. \tag{1.2}$$

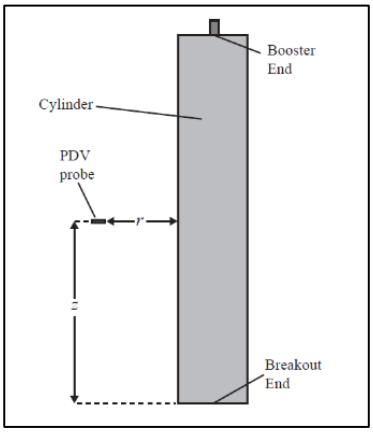

Figure 1.6. Generic experimental setup of a cylinder test, using PDV probe for wall velocity measurements (Robbins, D., et al. 2014)

1.3. Structure of the Thesis

Chapter 2 presents the theoretical background regarding the physical principles of optical metrology, namely interferometry techniques, with a main focus towards the operation of PDV, its hardware and how the signal is obtained.

Chapter 3 lists the requirements of this work's PDV system, proposes a PDV design to meet those requirements and provides the specifications for each component of the system and justifies its choice. An optical power loss budget for the PDV design is presented in Annex C.

Chapter 4 explains the data analysis of a digitised raw signal of a PDV measurement with further detail compared to Chapter 2, focusing mainly on the window function and the trade-off between velocity and time resolution, key features for obtaining a precise PDV spectrogram.

Chapter 5 presents a practical example of a PDV diagnosis for impact of a gas gun on concrete samples at Imperial College of London, specifying the PDV system used and the results obtained.

Chapter 6 concludes this work with identification of what is achieved and suggests the next steps in the PDV system designed.

Annex A presents a shopping list example for the proposed PDV design to summarise Chapter 3's work, along with an original scale figure of the design.

Annex B details an example of a 2 channel PDV for the same applications with a defined budget, as to simulate the acquisition of a PDV system and describe current expected values for several components, complementary to Annex A.

2. THEORETICAL BACKGROUND

2.1. Interferometry techniques

Optical measurement techniques such as interferometry measure extremely low changes in displacement or velocity. The approach was invented in 1887 with the Michelson-Morley experiment, which intended to prove a slight difference in speed of light depending on the direction of travel. Light is forced to travel through different optical paths. To manipulate the optical path, components such as fibres, lenses, mirrors and surfaces are used.

When different light beams converge they may overlap. Considering the phenomenon of those electromagnetic waves with both sinusoidal waves having the same polarisation and different phase or slightly different frequency, there is superposition and the creation of a new wave by interference. The phase difference between the waves dictates if the interference is constructive (when in phase), destructive (when opposed in phase) or somewhere in between.

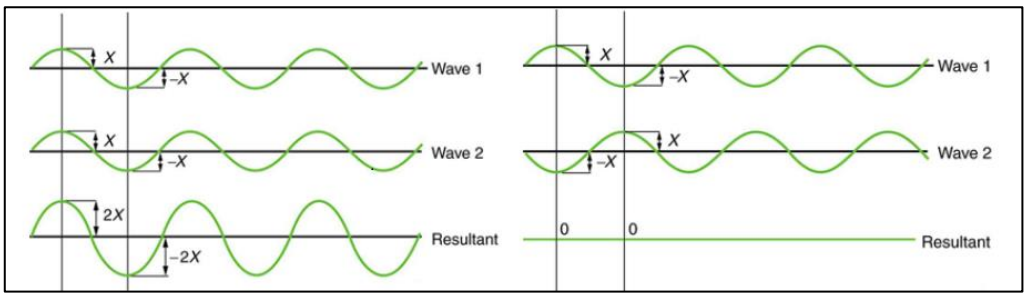

Figure 2.1. Constructive (left) and destructive (right) interference of two coherent waves with the same frequency. The difference of phase between both waves determines the type of interference. X is the wave's amplitude.

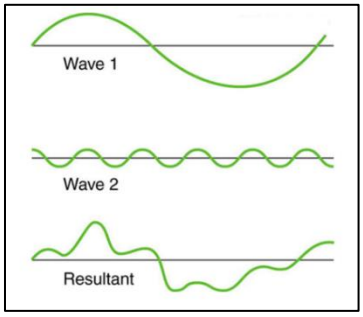

Figure 2.2. Interference of two coherent waves with different frequencies, producing both constructive and destructive interference within an irregular waveform.

Photodetectors measure irradiance (optical power over a certain area) of the new signal (beat signal), visually perceptible by the interference fringe pattern. Intensity of the fringes is higher for constructive interference and lower for destructive interference.

$$I(t) = I_0(t) + I_d(t) + \sqrt{2 * I_0(t) * I_d(t)} * \cos(\Phi_0 - \Phi_d). \tag{2.1}$$

The equation is adapted for our interferometry system, where $I(t)$ is the wave's intensity for a point in time, $I_0(t)$ is the intensity of the reference light, in theory always constant since it is not Doppler-shifted, $I_d(t)$ the intensity of the Doppler-shifted light, varying in time as the surface moves, and Φ_0 and Φ_d the phases of reference and Doppler-shifted light, with its subtraction the phase difference. The third term of (2.1) defines the type of interference depending on the phase difference, while $I_0(t)$ and $I_d(t)$ oscillate less (even if $I_d(t)$ is changing as the surface moves).

The displacement of the moving surface Δx alters the optical path length (OPL). Displacement of a material's surface is measured every half wavelength of the light source λ_0, affecting the fringe count (NOF) in the same proportion.

$$\Delta x = NOF * \frac{\lambda_0}{2}. \tag{2.2}$$

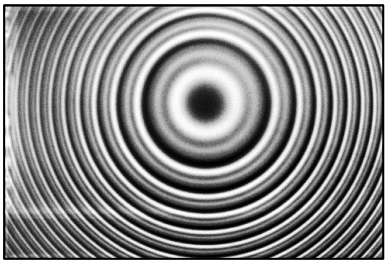

Figure 2.3. Example of a fringe interference pattern on a Fabry-Pérot interferometer. White fringes are a result of constructive interference where the light intensity is maximum, while dark fringes are a result of destructive interference.

Interferometry systems used in shock physics rely on the Doppler effect, when the OPL changes with the moving surface, to provide measurements. The Doppler effect is an apparent shift in frequency of a light or sound wave when there is motion of one or both source/observer relative to each other. For optics, light is the focus. If the distance between the source and observer is increasing, the relative frequency of light decreases, since the path length increases. If the distance decreases the apparent frequency is higher, since the path length decreases. The Doppler effect is dependent on who is moving (observer/source) and

if the distance between both is increasing or decreasing. For PDV the observer (sample's surface) is moving towards the fixed source (light source). Since light hits the surface and is back-reflected, that back reflection is also part of the OPL, so as the observer moves, the OPL changes twice as much, frequency is double shifted. The development from the general equation to PDV's case is shown below. f_d and f_0 are the Doppler-shifted and reference frequency, respectively. c is the speed of light, $v_{observer}$ and v_{source} are the velocities of the moving observer and the fixed source.

$$f_d = \left(\frac{c \pm v_{observer}}{c \pm v_{source}}\right) * f_0$$

$$f_d = \left(\frac{c + 2 * v_{observer}}{c}\right) * f_0$$

$$f_d = \left(1 + \frac{2u_p}{c}\right) * f_0, [u_p \ll c]. \tag{2.3}$$

Interferometry systems are divided by the ones that measure the target surface's displacement $\Delta x(t)$ and its velocity $u_p(t)$ (the symbol u_p is used in shock physics for particle velocity). PDV is a displacement interferometer like the Michelson interferometer, VISAR and the Fabry-Pérot interferometer are widely used velocity interferometers.

In a displacement interferometer, from the two optical paths that are travelled by light beams and create a beat wave/signal (signal that is the result of the interference of two waves), one involves the target and consequently is Doppler shifted by it, while the other path is travelled by non-Doppler shifted light (same frequency as the light source). The fringe count is proportional to the target surface's displacement over time. In a velocity interferometer, both optical paths involve the target. The light beams to be superposed travel different optical paths (one is the delay leg, responsible for altering the wave's phase proportionally to delay time) after hitting the target and being Doppler shifted by it. The fringe count is proportional to the target surface's velocity over time.

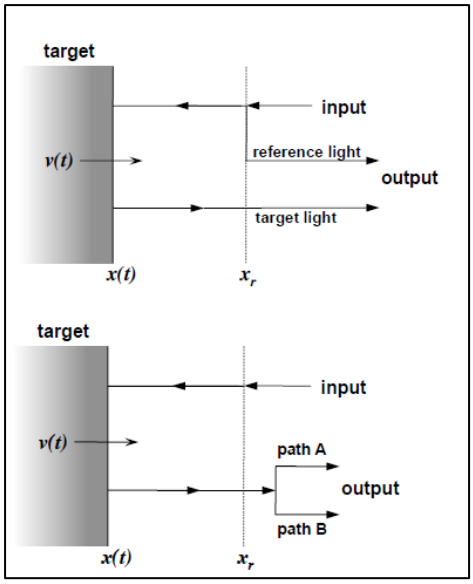

Figure 2.4. Difference of optical path between a displacement interferometer (top) and a velocity interferometer (bottom) (Dolan, D., 2011).

In displacement interferometry, a change in the optical path length (OPL), for which the target's movement is responsible for, affects the phase difference between the two superposed beams. In velocity interferometry, it is the rate of change of the OPL due to the target's movement that affect the phase difference of the waves.

Current optical detectors (also known as optical receivers, photodetectors or photodiodes) have maximum bandwidth (maximum frequency convertible from analogic to digital without significant loss of amplitude) of tens of Gigahertz (10^9 Hz), so interferometers are designed so that wave interference occurs for waves with different but nearly similar frequencies to assure the detector can transduce the optical beat signal (fringe pattern caused by superposition of both signals) to electric signal.

Lasers are currently the light sources used, accounting for wavelengths in the order of hundreds or thousands of nanometres, that corresponds to frequencies in the order of units or tenths of Petahertz (10^{15} Hz), which cannot be measured. For a 1550 nm laser source, the corresponding frequency is:

$$\lambda_0 = \frac{c}{f_0} = \frac{300*10^6}{1550*10^{-9}} \approx 0.19\ Peta\ Hz. \tag{2.4}$$

Measuring beat signals by superposing two signals with different frequencies (one being referred to as the local oscillator, in PDV's case is the Doppler-shifted light), is made possible by heterodyne mixing technology. Mixing the two waves with different frequencies produces two beats. The two beats in PDV will have frequencies of $|f_0 + f_D|$ and $|f_0 - f_D|$. The first one is on the Petahertz range and therefore not be detected, but the second is the beat signal (f_B) detectable in the Gigahertz range. If the sample's surface is moving at 1 km/s (velocity of target's surface, u) the beat frequency (combination of Doppler and non-Doppler shifted light) is, recalling (2.3):

$$f_d = \left(1 + \frac{2u_p}{c}\right) * f_0, [u_p \ll c]$$

$$f_d = f_0 + \frac{2u_p * f_0}{c}$$

$$f_d - f_0 = f_B = \frac{2u_p}{\lambda_0} \tag{2.5}$$

$$f_B = \frac{2*1000}{300*10^6} * 1550 * 10^{-9} = 1.29\ GHz.$$

Such a frequency is within the detector's range and oscilloscope's bandwidth range currently available in the market, hence the signal can be processed, and the resulting data analysed.

2.2. Particle/Photonic Doppler Velocimetry

As stated previously, PDV is a displacement interferometer based on the Michelson interferometer. It has been used for the study of shock physics phenomena since 2004 due to technological advances in its components, used in the telecommunications industry, at economic prices compared to other systems.

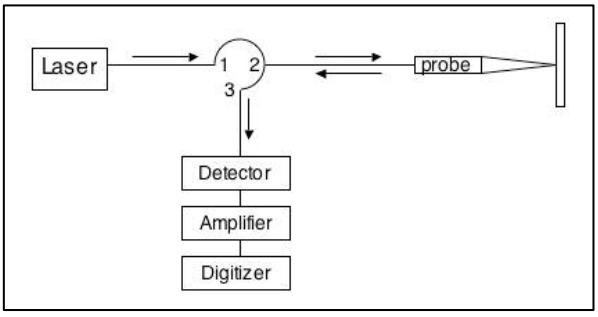

Figure 2.5. Initial PDV system and its components (Strand, O. T., et al. 2004).

A laser acts as a light source for the technique. It creates and amplifies a nearly single wavelength (monochromatic) beam in a gain medium (such as a crystal, a glass, a doped optical fibre). When luminous energy (photons) is pumped onto the medium's atoms it emits additional photons. If the medium has a feedback system like mirrors where one is partially reflective, the emission of photons is repeated extensively so the laser beam's photons released are nearly similar in wavelength and phase (coherent).

Laser has improved interferometry with narrow linewidth and long coherence distances and times compared to visible light. Using optical fibre as opposed to air as the medium of light travel represents a decrease in noise caused by fluctuations of properties such as temperature and allows for reduction of calibration of the system (Stowe, D., 1981), as well as flexibility and reduction of required space in the design of a PDV system.

Optical fibre is the medium of light travel and most of the optical path. The circulator is a 3-port device responsible for directing the optical path. Light travelling in an optical fibre will travel from port 1 to port 2 and be directed onto the moving surface. Some reflected, Doppler-shifted light will enter the optical fibre and travel to port 3 without being mixed with light leaving port 2. This allows for light reflected from the rear surface to be mixed with the non-Doppler-shifted light which acts as the local oscillator, which can be obtained for example from reflection inside the fibre's own end (generation zero) (Strand, O. T., et al. 2004), light coming straight from the laser source (generation one or three) or from a different laser (generation three), depending on the design of the PDV system used.

After the detector converts the optical signal into electrical signal, a digitizer/oscilloscope reconstructs the voltage-time signal with a number of samples. This data is analysed by a linear domain frequency analysis called Fast Fourier Transform (FFT), whose objective is to decompose the interference signal into its frequency components and their intensity, so the beat frequency can be indicated over a certain time period.

The FFT is an algorithm based on the Fourier series, which can be used to decompose complex and irregular sinusoidal functions/signals into a set of simple frequencies to be analysed individually and then reassembled to obtain a solution. This

algorithm is usually executed by software based on MATLAB® or Python®. The Fast Fourier Transform integrates the series over a specific time window to analyse continuous signals. The reason why the FFT is used instead of a Fourier Transform is to shorten the computation time of the results, which is achieved by reducing the number of calculations from $2N^2$ to $2Nlog_2(N)$, N being the number of points acquired. However, a FFT related transform called Short Time Fourier Transform (STFT) is preferred is due to its window function's role on noise reduction despite difficulties in resolving rapid low velocity changes (Jensen, B., et al. 2007), which is discussed on chapter 4.

$$S(f,t) = \int_{-\infty}^{\infty} s(t) * w(t) * e^{-2\pi i f t} dt. \tag{2.6}$$

The frequency-time response is obtained with the oscilloscope's voltage signal $s(t)$ adjusted to the window function $w(t)$, with f as the peak frequency for the time window selected. To calculate the velocity the equation (2.4) is applied in order of u_p.

A PDV system's design depends heavily on several requirements related to the direct applications of DEM/FCTUC's system and the available budget. Those requirements are mentioned in chapter 3 and command the choice of the PDV's design and equipment.

PDV designs are divided by "generations". Generation zero of PDV consists of the initial design displayed on Figure 1.2, where Doppler-shifted light reflected from the moving rear surface is mixed with back reflection from the probe itself, originally light emitted from port 2 of the circulator. Bare fibre ends are used, reducing the cost per experiment of the system compared to probes.

Generation one of PDV systems use the laser source directly as the reference in an optical path independent from the rear surface or the probe. In this case it is required the use of anti-reflective (AR) coating on the fibre end (whether it's bare fibre end or probe) to impede mixing from back reflectance on the probe with the Doppler-shifted light at high enough levels of optical power. Fibre splitters create two independent paths within one PDV channel, with both signals coupled before the detector, resulting in the interference fringe pattern. With this design, the optical power of each arm can be adjusted independently to obtain higher stability of the optical power of the beat signal.

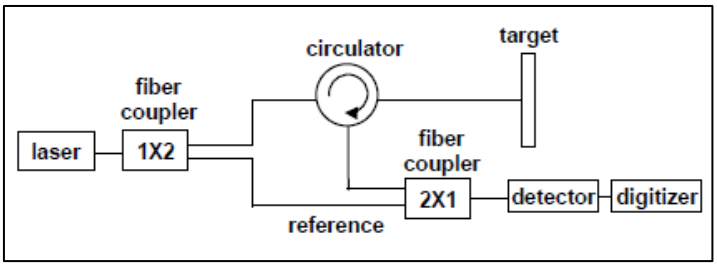

Figure 2.6. "Conventional" PDV, generation one system with two independent arms (Dolan, D., 2011).

Similarly of interest to this work are generation three PDV systems, which introduced the possibility of frequency conversion on the reference arm by using a second, tuneable laser or by adding to the reference arm a device called acousto-optic frequency shifter (AOFS). Upshifting/downshifting f_0 (f_1 for this configuration) consequently alters the beat frequency, which depending on the nature of the experiment can expand the type of phenomena to be tested in the same system (ones that require knowing the direction of travel, studying lower velocities) Shifting also creates a new frequency corresponding to the zero velocity, which can create uncertainty but can remove interference from baseline frequencies caused by sources of digital noise and improve time and velocity resolution, discussed in chapter 4. A new equation for beat frequency and velocity is required for generation three PDV, with the frequencies of the original laser f_1 and the tuneable laser f_2.

$$f_b(t) = f_d(t) - f_2 = \left[\left(1 + 2\left[\frac{u_p(t)}{c}\right]\right) * f_1\right] - f_2. \tag{2.7}$$

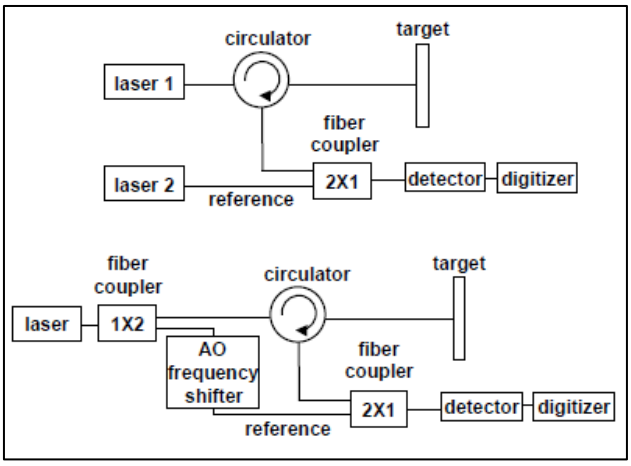

Figure 2.7. "Frequency-conversion" PDV's two configurations, generation three system with two independent frequencies (Dolan, D., 2011).

3. DESIGN OF PDV SYSTEM AND SPECIFICATION OF COMPONENTS

The objective of this work is to deliver a proposal for the design of a PDV system and the specification of its components. The design proposed is entirely based on: the requirements of the system, discussed in the next section; an economical approach; being a first iteration of the system, so low maintenance is preferred and the possibility of upgrading its components and configuration, if deemed advantageous.

An example of economic and functional influence on the design process is the how to connect optical fibres. Opting for fusion splicing the optical fibre in certain parts of the system as opposed to using connectors would: increase the system's cost (acquisition of a fusion splicer, a relevant percentage of total cost); remove flexibility in cleaning and maintenance procedures; require the user to perform a task that requires high expertise to avoid damaging the fibre's performance and lead to higher losses than a fibre connector.

3.1. Requirements

The requirements depend on the characteristics of the experiments discussed in subsection 1.2 and what is to be studied, dictating the configuration of PDV system to use and the minimum specifications of its components.

The system is designed for 4 channels, which affects: the available optical power of the laser per channel; the type of splitters/couplers; the available bandwidth per channel of the oscilloscope. Using 4 channels increases the cost of the system but allows a deeper research on shock physics phenomena.

As mentioned in subsection 1.2, velocities up to 4 km/s are expected to be measured. For a generation one configuration, the assumed maximum beat frequency to be measured (for each channel) on a signal originating from a 1550 nm laser will be:

$$f_b = \frac{2}{\lambda_0} * u_p = \frac{2}{1550*10^{-9}} * 4000 = 5.16\ GHz. \tag{3.1}$$

This is the minimum bandwidth per channel of the oscilloscope required. The higher the bandwidth, the higher the cost of the most expensive component of a PDV system. The detector's bandwidth must also be above this value. Detectors over this bandwidth are available at a lower cost than the oscilloscopes.

Another requirement pertains to the acceleration window, as in the time during which there is an acceleration of the flyer plates caused by detonation. An acceleration window of 2, 3 µs is considered for characterising explosives, while for explosive welding with plates accelerated at 1 km/s, an acceleration window of 5 µs is considered. It is directly related to what time window the data is to be analysed, which affects the capabilities of the oscilloscope (sampling rate, record length, resolution for that time window) and the required temporal coherence of the laser.

As for time resolution and velocity resolution, two terms inversely related, it should guarantee accurate data collection to study velocity profiles and certain features of the process. Time resolution is dependent on: the capabilities of the laser, detector, oscilloscope and on the time scale of the Short Time Fourier Transform (STFT) applied. The time-velocity trade-off should be set considering what is to be analysed, from a complete velocity history of the sample to features such as the elastic precursor, the CJ point and the Von Neumann spike (phenomena related to abrupt velocity transients).

The distance of travel of the sample indicates the minimum initial stand-off (between probe and rear surface) and affects the type of fibre end used, which has financial consequences (possible destruction of fibre end in each experiment) and performance consequences (efficiency of the fibre end and quality of data). The laser must guarantee a coherent beam for the OPL. For explosive welding a distance of travel of 5 mm is considered, for the cylinder test a distance of travel of 10 to 20 mm is assumed.

Knowing the setup of the experience will dictate: the position of the probes (and therefore the optical path); reflectivity and geometry of the surface. An estimate of the number of experiments per day affects the complexity of the system in terms of calibrations. This system is expected to run one or possibly two experiments in a day. These experiments

have a detonation process that does not release a flash of light, which can create noise in the detected signal if the design doesn't account for the presence of visible light. An interferometer based on an infrared laser and an enclosed medium of travel (optical fibre) heavily reduces the importance of this occurrence but is a relevant PDV design feature.

Finally, the feature size defines the sampling rate and time resolution required. Studying a velocity profile over a certain time window that fits the whole detonation process does not require the same type of time resolution and capabilities of the oscilloscope that a feature such as the Von Neumann spike or the Chapman-Jouguet point requires. The time-velocity resolution trade-off needs to be high enough to study those features for characterising the detonation process of several explosives.

3.2. Design proposal for DEM/FCTUC's PDV system

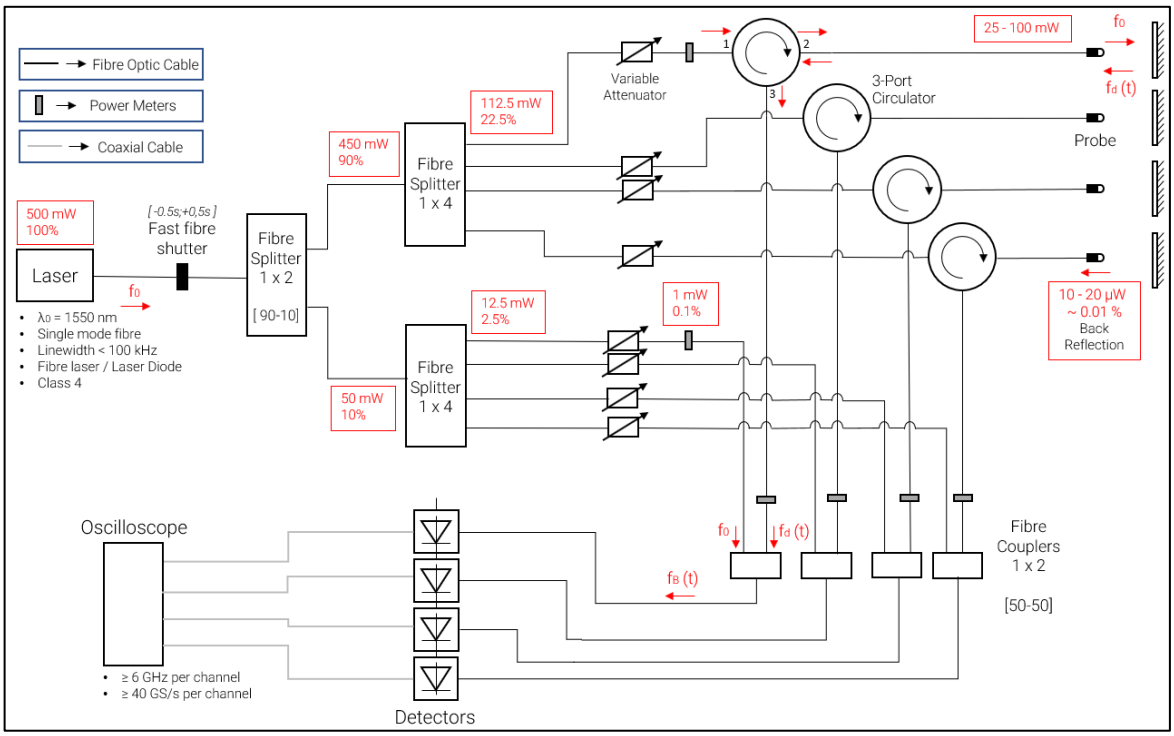

Figure 3.1. Design proposal for a 4 channel PDV system for DEM/FCTUC, for particle velocities up to 4 km/s.

This proposal comprises of a 4 channel PDV system powered by one laser. A generation one PDV system will create two independent arms per channel (reference arm and Doppler-shift). This configuration suits high speed experiments where baseline signal does not heavily tamper the signal (except at breakout). This configuration does not require

acquiring another laser or AOFS and allows for easier setup compared to a generation three configuration (calibration of both lasers to achieve known zero beat frequency velocity). The values of power represented are the theoretical values, not accounting for optical losses.

Monochromatic light is emitted from a minimum 500 mW single mode fibre laser into the single mode optical fibre, being split by a 1x2 fibre splitter with a 90 to 10 ratio which will separate the signal to be Doppler-shifted and the reference signal. Each arm goes through a 1x4 fibre splitter to create 4 channels that will inject light into 3-port circulators. Light will be emitted through port 2 of the circulator and directed onto the target through either a bare fibre end or a collimator/focuser probe. Some of the Doppler-shifted light is then reflected from the surface back to the fibre, goes from port 2 to port 3 of the circulator and will mix with the reference arm at a 2x1 fibre coupler, for each channel. The temporal interference fringe pattern is recorded on the detector and then sent to the digitizer/oscilloscope for Fourier transform (FT) analysis.

An important parameter of a PDV system is the optical power per channel available, which depends on: the efficiency of the collection of back reflected light from the accelerated surface to the probe; possible losses in components during the OPLs; minimum and maximum allowed optical power in all optical components. All three concerns are specified in subsection 3.3 and Annex C.

3.3. Components

This section discusses with greater detail the components chosen for this design and justifies how those components are suitable for the applications of this PDV system and consequentially the requirements indicated in section 3.1.

For any PDV system the existing components in the telecommunications industry already restrict certain specifications. For example, a power source with a different wavelength could be chosen, but lasers with this wavelength are widespread in the telecommunications industry, so there is: higher offer in the market, thus decreasing their price; assurance for the PDV user that the equipment is fabricated under international

standards and documented requirements that manufacturers apply, guaranteeing quality, reliability and compatibility with the remaining optical components operating at that wavelength. Using a lower wavelength would also produce a higher beat frequency and require higher bandwidth of the oscilloscope, per (3.1).

For any assembly with various components linked, the choice of one component is dependent on the characteristics of another one, although the ordered subsections below would suggest otherwise. This factor is highlighted throughout the design process.

3.3.1. Optical fibre cable and connectors

Optical fibre is the medium of travel for the laser beam, serving as most of the optical path. Assuming no excessive bending is done on the optical fibre, laser linewidth is very low (under 100 kHz) and assuming: electromagnetic interference caused by external equipment has no effect on optical fibre; attenuation of signal in an optical fibre is considered low although it should be quantified for long distances; then no significant signal losses should be present. However, polarization mode dispersion caused by induced stress on the fibre when manipulating it is a common systematic loss. The solution would be using polarization maintaining fibres, but it would highly increase the system's cost (all optical components would have to be polarization maintaining) while not increasing performance enough. A fibre optic power meter can provide information on the real power output (and so the efficiency of the optical fibre, which decreases with time and use).

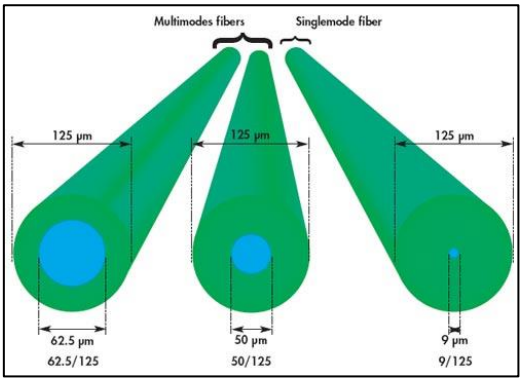

Figure 3.2. Cross-section of an optical fibre's cladding (green) and core (blue) for multi-mode and single mode fibres. The glass used on the core has a higher refractive index than the cladding's glass, guaranteeing total internal reflection inside the core, where light travels.

The capacity of transportation of data of optical fibres available over an OPL typical of a PDV system is usually above the acquired by the detector and oscilloscope.

The main choice is whether to use single mode fibre (SMF) or multi-mode fibre (MMF). While SMF is associated with large distance communications (well above the expected OPL of PDV systems), MMFs available do not operate at the chosen wavelength for the laser (1550 nm), while SMFs do. SMF is chosen for PDV applications also because light travelling through a single mode, having the same frequency and narrow linewidth, will be less likely to exhibit dispersion (unwanted distortion of signal caused by a non-uniform speed of travel of different beams due to linewidth) since it travels in the same mode, required to produce useable fringe patterns. This is not the case for MMFs. Dispersion affects negatively bandwidth, which is key in interferometry techniques. Therefore, SMF is the most indicated for high precision applications such as PDV. Price of SMF is typically higher than MMF but is a very low percentage of the system's overall budget.

The choice of using fibre connectors over splicing cables is based on: economic reasons (due to high acquisition price of splicing equipment); higher required expertise for mechanical or fusion splicing; flexibility that is wanted for a first PDV system; accessibility of cleaning fibres before each experiment and power output measurement. Out of the commonly used FC connectors (lasers, fibre couplers and other components are usually prepared for this type of connections), FC/APC connectors (angled physical contact, cleaved at an 8 degree slant) present a lower loss and back reflection than other types of connectors (Devore et al., 2009) and are the ones chosen for this system and for most PDV systems.

3.3.2. Laser

The laser, along with the photodetector and oscilloscope, is one of the most important components in a PDV, whose choice dictates the capabilities of the system.

Selecting a laser for SMF use requires knowing: the wavelength of the laser beam; number of channels; the maximum deviation of the wavelength (linewidth or full width at half maximum, FWHM) allowed; for how long and how far the laser beam must maintain its phase relationship (temporal coherence) ; the expected efficiency of the fibre end; expected optical power losses; minimum and maximum power allowed in circulators, detectors and the remaining optical components.

Temporal coherence of the laser must be maintained for the OPLs of reference and sample arm, and consequently during the acceleration window of the experiment (on the scale of microseconds). Temporal coherence is related to the linewidth of the laser or FHWM. When selecting these lasers, a low phase noise and power stability are desirable.

The laser beam is a continuous wave (CW) rather than pulsed because the characteristic of pulsed signal (high variation of amplitude of the wave) leads to linewidths and therefore temporal coherence that are not within the requirements. By choosing the near infrared (IR) 1550 nm beam, without needing for the laser to be tuneable, the possible choices narrow down to some laser diodes and to fibre lasers.

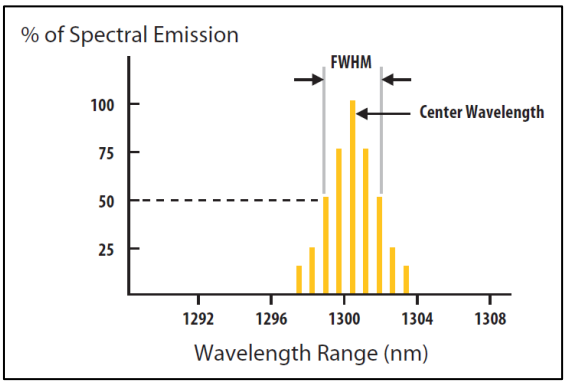

Figure 3.3. Representation of linewidth of a monochromatic light source. Laser manufacturers indicate FWHM in the frequency domain or as the spectral width at 50%.

If the linewidth is 100 kHz (single frequency, narrow linewidth lasers are normally in the tens of kHz range), the corresponding coherence length and time is:

$$L_{coh} = \frac{c}{\pi * \Delta\upsilon} = \frac{3 * 10^8}{\pi * 100 * 10^3} \approx 950\ m \tag{3.2}$$

$$\tau_{coh} = \frac{L_{coh}}{c} = \frac{950}{3 * 10^8} \approx 3.17\ \mu s \tag{3.3}$$

Lowering the linewidth requirement to 50 kHz is ideal. Assuming the OPLs of each arm (in the Doppler-shifted arm it is the fibre's length plus twice the initial stand-off) are not close to 100 m each, that coherence length is well above the OPL. However, that value corresponds to an uninterrupted, lossless path. Per direct user experience, a safety factor approach regarding the linewidth value is advised, so the laser for this PDV needs to be under 100 kHz to obtain a highly accurate beat signal. A 30 kHz linewidth results in a coherence length and time of 3.17 km and 10.5 µs, respectively.

The power in each section of the PDV, without accounting for optical losses on components, is shown below, for a minimum required power output of 500 mW. There is a safety issue with choosing a class 4 laser (power outputs above 500 mW) or a class 3B laser when a collimator/focuser probe is used as the type of fibre end. A solution to minimise health and safety hazards is provided in subsection 3.3.4.

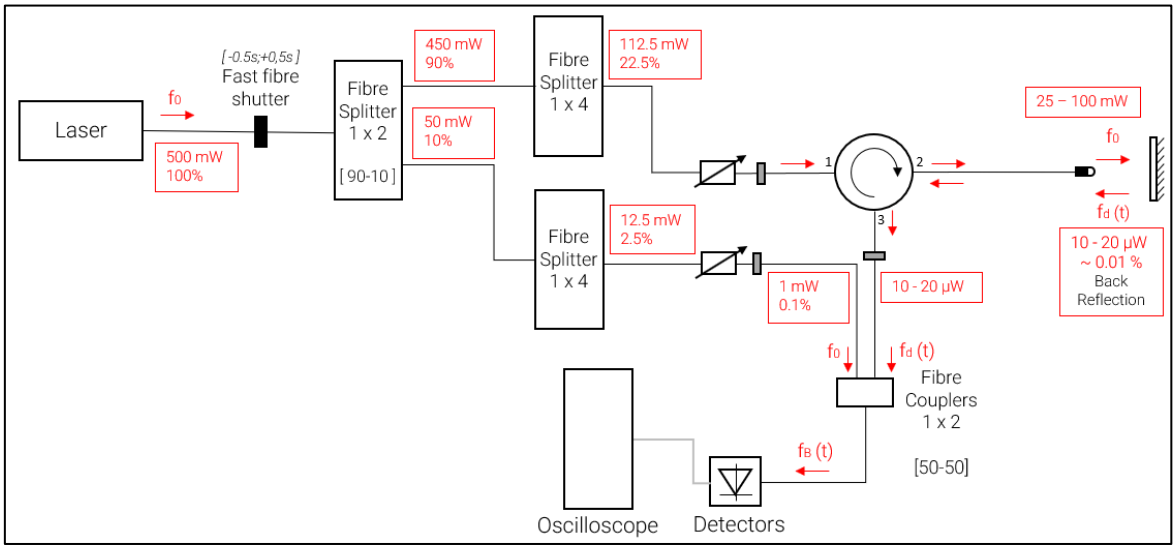

Figure 3.4. The proposed design detailed for one channel and decomposition of optical power for each arm.

The type of fibre end used directs a certain power, but reflectivity of the sample's surface (even if mirror-coated), scattered light that is not collected, the type of lens, chosen initial stand-off distance and possible tilt of that surface or cylindrical geometry is responsible for scattering of the Doppler-shifted signal that is back reflected onto the probe. Direct user experience at ISP (25 to 100 mW recommended leaving the probe, 10 to 20 µW usually back reflected, for high speeds in the order of the ones to be measured by this system) sustains published efficiency of the back reflection collected (Strand, O. T., et al. 2004; Strand, T., et al. 2008) of 10^{-4} (0.01%) in metallic and therefore highly reflective surfaces.

The chosen power output is not the minimum theoretical output that accounts for the expected 10^{-4} efficiency of Doppler-shifted light. It is, however, a common value of power outputs sold by manufacturers (in low power CW fibre lasers for high speed sensing) and it guarantees that the system's losses do not affect the performance of all 4 channels. It also gives the user flexibility, since different applications may demand different types of probes and even lower back reflected power.

Diode lasers are an option usually manufactured with optical power outputs under 500 mW. The decision against using them concerns the typical linewidth in these components compared to telecommunications low power fibre laser. If a stable, low linewidth 40, 60, 100 mW laser diode (LD) is available that complies with requirements and the cost of four LDs does not exceed the cost of a fibre laser, then its use is feasible. The only advantage in reducing the power output would be downgrading the laser class (becoming a safer operation), which removes the need for the fibre shutter.

Power meters are recommended in the locations specified in Figure 3.1, since it keeps the user informed over the need to adjust the variable attenuators and to understand how the geometry of the sample, type of probe lens and reflectivity of the sample affect the quality of the signal to be digitized, which improves the resulting spectrogram.

3.3.3. Fibre couplers/splitters

Fibre couplers, (also referred as splitters), are used in PDV systems to multiply the design options either by allowing separate paths for the reference and Doppler-shifted light and/or by allowing a single laser output to power several PDV channels.

Fibre couplers are bi-directional, used either to be split (splitters) or combine signals (couplers). For a 1x4 coupler, the signal is divided in an equal 25% ratio between the 4 divided signals. As for 1x2 couplers/splitters, various ratios are commercially available, with 90-10 and 50-50 ratio being the ones used in ISP's PDV systems.

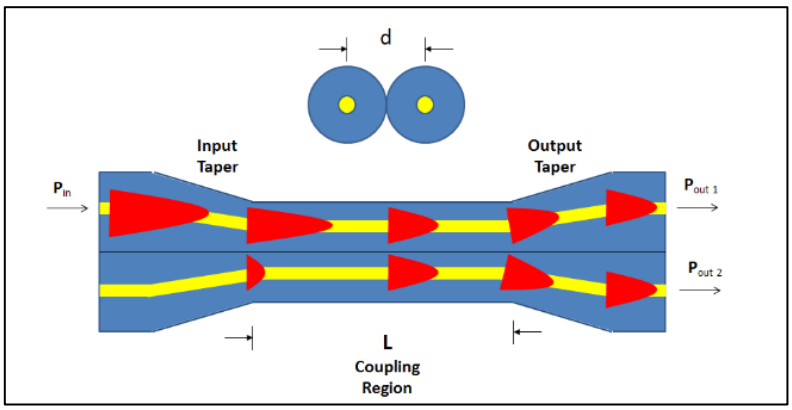

Figure 3.5. Detail of a 1x2, 50-50 coupler (when splitting a signal) in a Fusion Bionic Taper (FBT) construction. In red the passage of light between two cores close together is represented (Newport, 2018).

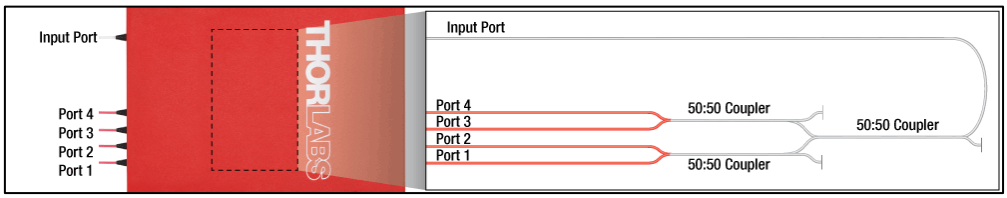

Figure 3.6. Detail of a 1x4, equal ratio Thorlabs coupler. In this particular model there is no bi-directionality and therefore it can only be used to split and not to combine.

Among couplers for single mode, single wavelength use, FC/APC connector end (chosen for this PDV), they can be divided in two categories: Active or passive; Planar Lightwave Circuit (PLC) or FBT type of construction. An active coupler contains a photodetector and so it converts the optical signal to electrical. A passive coupler only distributes signal without optical to electric transduction, which lies in this system's requirements. The FBT couplers are the ones used in PDV applications. They are cheaper than the PLC couplers, available in different ratios and while PLC's have better performance, that difference is significant only in ratios over 1x8 (Multicom, 2018).

To divide the laser's output into a reference and Doppler-shifted arm, a 1x2 splitter with a 90-10 ratio is used, since only 1 mW is required in the reference arm (subsection 3.3.4 explains how this value is decided), per direct user experience with PDV and per specifications of the detectors' minimum and maximum power recommended for proper use.

The other reason why the reference arm's optical power (and therefore irradiance) should be much higher than the back-reflected power on the Doppler-shifted arm is related to (2.1). Having an $I_0(t)$ (reference arm, static value) much higher than $I_d(t)$ (Doppler-shifted arm, oscillating value) affects the first and third term of the equation so that $I(t)$ is less sensitive to the changes in $I_d(t)$ which stabilises the signal, minimising baseline noise (Strand, O. T.et al., 2006).and signal clipping on the oscilloscope.

To create 4 channels, 1x4 splitters of equal ratio are used. To recombine, for each channel, reference light and Doppler-shifted light, a 1x2 coupler is used. Other ratios may be experimented, depending on whether more signal stability is required on the detector

(increase ratio for reference arm) or the signal received is low quality (need to increase ratio for the Doppler-shifted arm).

3.3.4. Variable Attenuators and Fibre Shutters

A variable optical attenuator (VOA) controls the available power output of a signal in an optical path to a user-defined value. It is key to have control of the optical power available in sections of PDV, instead of being dependent on the fluctuating power losses caused by the PDV's optical components.

VOAs, within the single mode, 1550 nm single wavelength, FC/APC connected and manual actuation (digital comes at a higher cost and its benefits are not necessary), are mostly available in three types of actuation: air gap; inline; and collimator. All three serve its purpose, as long as their losses are not significant (directivity high enough to be virtually insignificant) and its maximum optical power input is above the expected in the system. Their range of attenuation needs to be within the necessary ones in the system. The collimator VOAs are the more robust and the ones used in the PDV systems in ISP, where a screw adjusts the value of attenuation.

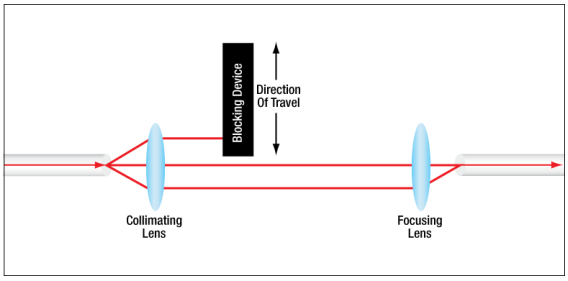

Figure 3.7. Detail of a non-bi-directional collimator VOA by Thorlabs. Screwing/unscrewing it alters the percentage of the signal blocked.

A fibre shutter is used as a security measure. It consists of a diaphragm that opens for a specified amount of time to allow the laser beam to travel through the fibre optic. Using a class 4 high power laser can: severely injure the user's eyes and skin even if the absorbed light was scattered; increase the temperature of the explosive due to absorption of that highly directional beam, altering the microstructure of the sample unwilfully. A 1550 nm infrared beam can injure the cornea due to the temperature rise of the eye during exposure, according to laser safety regulations. The fibre shutter is set for a time range: larger than the time window required by the PDV and the rise time of the photodetector; short enough to not

overheat the sample. Based on the applications of 1.2 and direct user experience at ISP, setting the time range for half a second before and after the detonation is recommended.

3.3.5. Optical Circulators

The circulator is crucial for the PDV system, as explained in section 2.2. For circulators, the important parameters are related to losses during the injection (insertion loss) and emission of light from one port to the other (extinction ratio and directivity). The extinction ratio or isolation quantifies how much injected light goes through the "expected route" (port 1 to 2 or port 2 to 3) compared to light being reflected inside the optical components of the circulator in that transmission (port 2 to port 1 or port 3 to port 2, respectively. Directivity refers to the efficiency of the birefringent characteristic of the circulator, quantifying the ratio of light going from port 1 to 2 compared to port 1 to port 3.

Circulators are available as reflective (cube) and as transparent (inline) optical circulators. Inline circulators are cheaper, easier to align, more compact and are less affected by polarization losses compared to cube circulators (Podsednik, J., 2010) and are therefore used in PDV systems, while its directivity and extinction ratio do not compromise the PDV's signal fidelity (risk of interference between port 1 to 3 and port 2 to 3 light). 1550 nm centre wavelength, FC/APC connection, single mode fibre optical circulators are selected, as they have a good quality-price relation. The circulator must be able to handle optical power above 112.5 mW expected at port 1 and below 10-20 µW expected at port 2. The range of values for extinction ratio found were 20 to 50 dB, corresponding to a maximum of 1% of light coming into port 1 or 2 lost, which doesn't compromise the optical signal's fidelity.

3.3.6. Type of fibre end

The first decision is whether to use a bare fibre end, a collimating probe or a focusing probe. The distances of travel of 5 mm or 10 to 20 mm are feasible for all three options. The trade-off is between quality of the received signal and financial investment.

The initial stand-off between fibre end and sample surface, the sample's geometry (planar or non-planar), the available power of the laser, the surface's reflectivity and roughness (which can be improved), the possible tilt of the surface and the available

space to position the fibre end are the main parameters to choose a probe (Strand, T., et al. 2008). Probes are manufactured for a wide range of wavelengths. It is assumed that the laser's coherence length is large enough to not affect the selection. Different applications (subsection 1.2) can differ in distances of travel, geometry and reflectivity of the surface and therefore each application can have its own specific solution.

It is assumed that the probe is AR coated, as to minimise reflections from already Doppler-shifted light (these reflections can appear in a spectrogram). Unlike a generation zero configuration, for this generation one PDV the back reflection inside the probe itself should be minimised since the reference light is meant to be separate from the Doppler-shifted light. Its maximum power input needs to be over 112.5 mW (input on the circulator).

The fibre end in each PDV experiment can be destroyed or not. If it is destroyed, the cost of using a collimator/focusing probe over a cleaved bare fibre end is a multiplication of that cost over the number of experiments and PDV channels, which is large considering high-performance (-60 dB of back reflection) probes may cost, in bulk, around the 100€ range, while the bare fibre end alternative consists in just cutting the part of the fibre that was destroyed and re-cleaving it and purchasing additional fibre (down to 1.50€ per metre).

The third option is using a bare fibre end or probe without it being destroyed. This can be achieved either by positioning it far enough from the surface, increasing the necessary laser power required, the effect of surface tilt, and the required focal length (only feasible for the probe solution), or by using a 90º mount where a mirror and either a probe or a bare fibre end (and lens) are mounted and aligned perpendicularly to the sample (also increases the possibility of less light collection). Other free-space solutions can be used where the fibre end is not destroyed. Chapter 5 shows an example and explains how, if other diagnostics techniques are to be used simultaneously, a similar solution is employed using lenses and mirrors in free space.

Figure 3.8. The Thorlabs kinematic 90º mount used at some ISP experiments. The cavities allow for mounting of a blast shield glass and a mirror, to define the optical path and protect the chosen fibre end.

There are advantages of collimator/focuser probes on: the control of key parameters for collection of reflected light; the quality of the data compared to bare fibre end (Devore, D., 2006); and the flexibility of positioning. Those advantages are considerable and therefore using probes in a configuration where they are not destroyed will have the ideal financial to efficiency trade-off, if a correct alignment is possible and the collection of Doppler-shifted light is enough to generate a strong beat signal. Without assembling the system for each type of experiment it is not possible to verify if spatially it is possible.

The type of lens geometry affects the optical properties of the probe. Gradient index (GRIN) and achromat lenses are the ones typically used. GRIN lenses are cheaper to manufacture, occupy less space and therefore favour situations where probes are distributed closely together but are asymmetric (the focal point does not coincide with the back focal point). Achromat lenses are more expensive to manufacture and are symmetrical. They are associated with high quality which can be important when beam divergence needs to be reduced due to a non-planar surface (cylinder test for example).

Choosing between a collimator probe and a focuser probe depends on: the required spot diameter (SD). or beam diameter (BD); the focal length (f') and solid angle. For applications requiring high spatial resolution, such as this one, a small spot diameter (such as 100 µm) is recommended (Strand, T., et al. 2008). The focal length and solid angle requirements are dependent on the initial stand-off (i), the spatial distribution of each probe (experimental setup) and the spot diameter

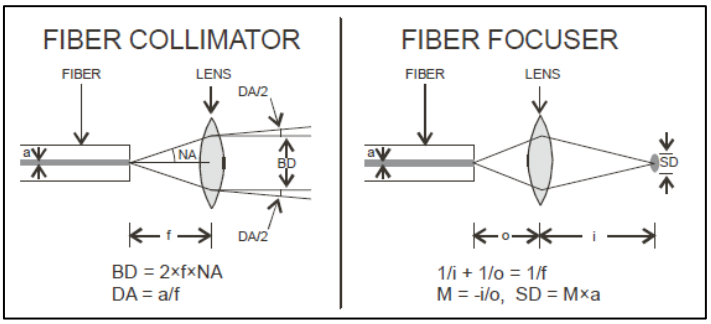

Figure 3.9. Operating principle of a collimator and focuser lens and respective parameters. The image portrays a bare end fibre with the beam collimator/focused externally, while a probe will embed both components. Image extracted from OZ Optics catalogue.

The process of selecting a collimator probe is presented for the example of an initial stand-off of 30 mm using a single mode, 1550 nm fibre with a 9 µm core diameter (a) and a numerical aperture (NA) of 0.14. Assuming the desired focal length is placed slightly in front of the rear surface (focal length of 29 mm for example) (Strand, T., et al. 2008), then the beam divergence (DA) and the beam diameter will be:

$$BD = 2 * f'\,[mm] * NA = \ 2 * 29 * 0.14 = 8.12\ mm \tag{3.4}$$

$$DA = \frac{a\ [\mu m]}{f'\ [mm]} = \frac{9}{29} \approx 0.31\ mrad \tag{3.5}$$

With these parameters calculated and type of lens chosen, the fibre end can then be characterised to optimize Doppler-shifted light collection for each experimental setup. Light collection can be optimized according to the surface tilt of the experiments by placing the fibre end at a certain angle. The calculations show that a focal length of 0.13 mm would be required to achieve a spot diameter of 100 µm, which is unrealistic. For that requirement a focuser lens would be selected, for an image distance/initial stand-off of 30 mm:

$$M = \frac{SD\ [mm]}{a\ [mm]} = \frac{0.1}{0.009} \approx 11.11 \tag{3.6}$$

$$o = -\frac{i\ [mm]}{M} = \frac{30}{11.11} \approx 2.7\ mm \tag{3.7}$$

$$f'\ [mm] = \frac{o * i}{o + i} = \frac{81}{32.7} \approx 2.5\ mm \tag{3.8}$$

Where MF is the magnification factor and o is the object image (when using a probe rather than a loose lens plus bare fibre end, this is the length of the probe). Selecting a probe and its location is therefore not a straightforward process. The OZ Optics catalogue where Figure 3.9 was extracted states that spot diameters as low as 5 microns can be

achieved. A focusing probe configuration that either avoids destruction of the probe (perpendicular mount or positioned far enough) or the use of bare end fibres positioned at a distance slightly superior to distance of travel is the recommended choice, however this selection process should only be final after analysing the experimental setups at DEM/FCTUC.

3.3.7. Photodetectors

A photodetector/photoreceiver uses the photovoltaic effect to transduce the optical interference signal (obtained after recombination of light from the Doppler-shifted arm and reference arm) into an electronic signal. Selection of a photodetector (PD) for a PDV system is mainly based on: input wavelength; domain of beat frequencies to be measured (velocity of the sample); expected power input; suitability for SMF use.

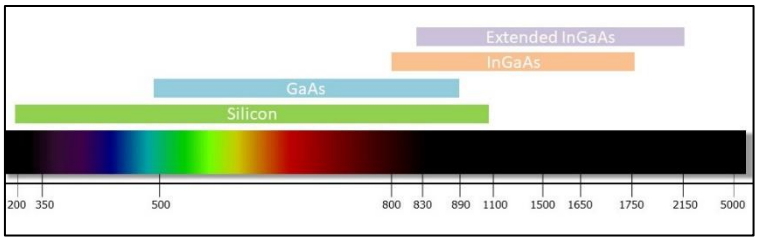

Figure 3.10. Types of PD construction and their wavelength input ranges. InGaAs are the ones who fit the input wavelength requirement.

The bandwidth is defined for a PD as the measurable maximum frequency of the input optical signal until its attenuation reaches 3 dB. InGaAs PDs commonly operate on bandwidths higher than 10 GHz which suits the application. The 12 GHz MITEQ DR125-G PDs are a typical choice among the UK's PDV user community, per private communications with PDV users of ISP and the University of Cambridge.

It is recommended to have some leeway in bandwidth of PDs since the usual frequency response and return loss graphs provided by manufacturers show that performance of the PD is not uniform for that bandwidth and there is decay as the frequency reaches the maximum level. Maximum power input levels in several PDs range from 2 to 5 mW and the chosen PD will define the expected input power on the PDV channel's reference arm, since the Doppler-shifted arm hardly reaches those values, as explained in subsection 3.3.6. That

range influences the choice of laser power output. Direct user experience suggests the design's 1 mW power in the reference arm is adequate for producing a quality beat signal.

3.3.8. Oscilloscope

To analyse the electronic signal from the detector's output with a STFT, it needs to be previously digitised. An oscilloscope (or digitiser) is the component used in PDV for digitising the signal under a user defined time window. An interface allows the user to visualise in real time the signal resulting from the detector. The most considerable economic investment in a PDV system is the oscilloscope. Acquiring a second-hand oscilloscope decreases its economic impact on the available budget, making it a feasible option when cost minimising is crucial for the user.

Its price is directly related to its bandwidth and must be higher than the expected maximum beat frequency. Commercially, the closest available bandwidth to the 5.16 GHz requirement is 6 GHz. However, per direct user experience, a 6 GHz oscilloscope may not guarantee that same capability when used with multiple inputs (PDV channels). For a 4 channel or even 2 channel PDV, an 8 GHz oscilloscope may be necessary to guarantee a minimum bandwidth per channel of 6 GHz. Furthermore, the bandwidth of an oscilloscope is the frequency range that can be input without significant loss of amplitude (up to 29.3% loss of its true signal, as in -3 dB for amplitude), so this frequency range is not lossless by definition. Therefore, the oscilloscope must have a minimum bandwidth, per channel, of 6 GHz. The rule of using an oscilloscope with at least five times the highest frequency signal to be measured (Tektronix, 2005) for this application is economically impractical.

The rate at which a sample is retrieved by the digitiser during the quantisation process is called the sampling rate. According to the Nyquist-Shannon theorem, to avoid aliasing ("artificial" samples created by the digitising process itself due to insufficient sampling rate) a minimum of 2 times the signal's bandwidth is necessary. For a 5.16 GHz beat signal, this corresponds to a minimum sampling rate of 10.38 GS/s (giga-samples per second or GHz when referred to as sample frequency or f_s). 10 to 20 times the signal's bandwidth is recommended when a signal is digitised (Strand, O. T., et al. 2004;). 5 minimum samples per oscillation of the beat wave is also used as recommendation (Johnson,

J., et al. 2008; Tektronix, 2005). That corresponds to approximately 80 GS/s for 15 points per oscillation, which is optimal but not usually available for 6, 8 GHz oscilloscopes, per market research. A 40 GS/s sampling rate corresponds to approximately 7.75 points per oscillation and is a practicable price/quality trade-off for this system. Fast rise times are expected in the PDV's applications and therefore the importance of sampling rate and record length is enhanced. Like bandwidth, the oscilloscope's sampling rate for multiple channels may be lower, so a requirement of 40 GS/s per channel must be met.

The oscilloscope must also have enough memory (number of points collected in a measurement) to digitise for a given duration. That property is called record length (RL). Considering a threshold of 100 µs for the duration of measurement, feasible for low speed experiments as well (chapter 5) that exceed time windows used in high-speed research referenced in this work, the minimum record length (in million points) of the oscilloscope required, (minimum 40 GS/s sampling rate/frequency), is:

$$RL = Duration\ of\ measurement * f_s = 100 * 10^{-6} * 40 * 10^{9} = 4\ Mpts \quad (3.9)$$

Commercially, this value is typically lower than the RL of 6 GHz oscilloscopes. What is necessary, during the selection of the oscilloscope, is making sure its record length (number of points or the maximum duration of measurement for that memory) at the available sampling rate per channel and the desired time of measurement.

4. DATA ANALYSIS

The final step of the PDV technique consists of converting the digitised signal into an evolution of velocity over a desired time of analysis, dependent on what features of shock wave profile are to be studied.

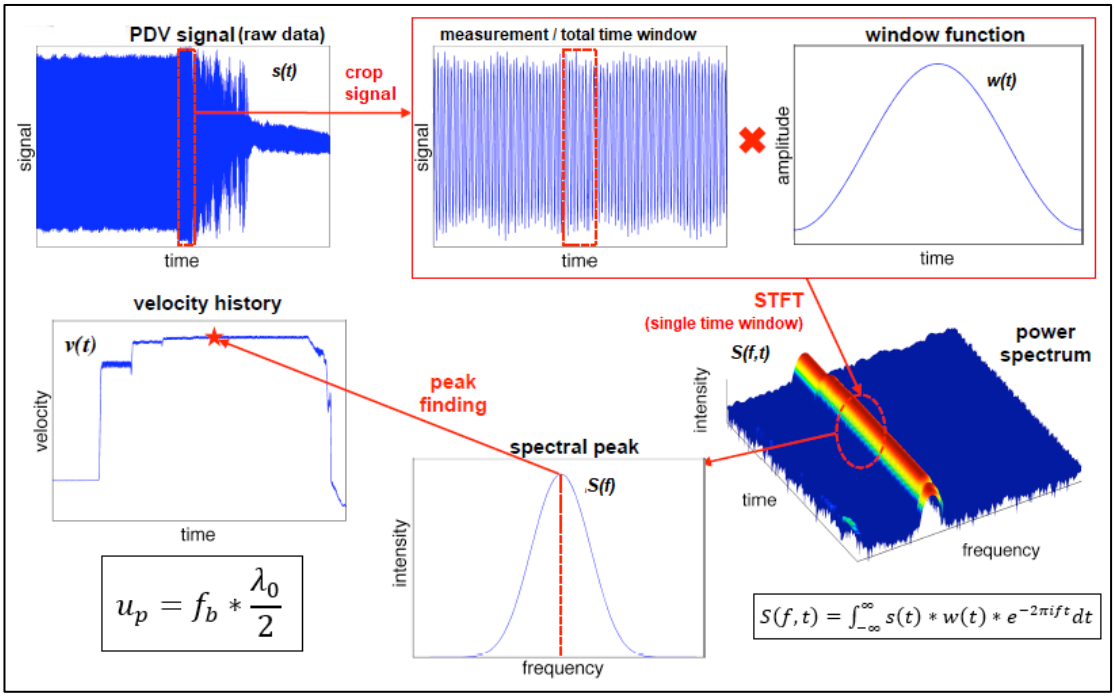

Figure 4.1. Example of a data analysis procedure from raw signal extraction (from the oscilloscope) to obtaining the velocity history, for a single time window (Dolan, D. H., 2011). This is then repeated for the next time window (with some overlap) until completed for the total time window chosen.

The PDV raw signal extracted from the oscilloscope (top left), to be run in the MATLAB script with the FFT algorithm, is cropped for a single time window. The duration of the total time window should contain the data related to the material's behaviour (the time of measurement is always higher than the acceleration window, for practical reasons). It is chosen depending on the expected results of the experiment, the trade-off between time and frequency (therefore velocity) resolution and which features to be studied.

For each cropped single time window, a window function is applied to its signal. The window function is a STFT parameter and is analogous to a correction factor, to reduce spectral leakage ("false" signal created by the discrete digitising of oscilloscope) and consequently increase frequency resolution. The window function alters the algorithm to be

less sensitive to rapid changes of frequency (where ringing artifacts are common) and more sensitive to slight frequency changes.

The STFT is run on the single time window and the peaks of frequency are obtained (decomposition of the complex signal). The frequency-time evolution is converted analytically to a velocity-time evolution by (2.5). This step is repeated over a series of single time windows. The time scale/step and total time window are defined by the user prior to the STFT.

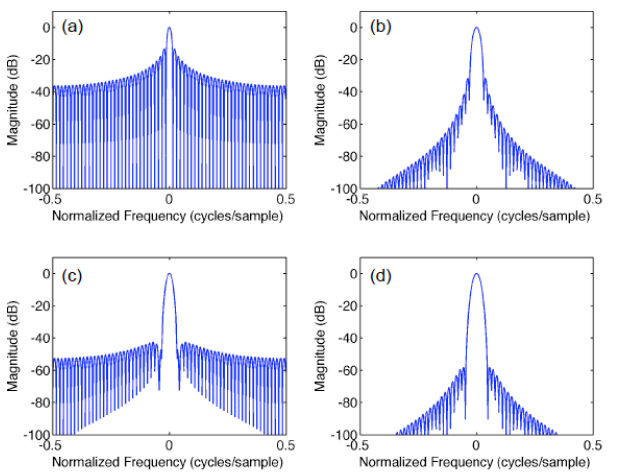

Window	Highest Side-lobe Level (dB)	Side-lobe Fall Off (dB/oct)	Comments
Boxcar	-13	-6	sensitive to signal phase
Hann	-32	-18	preferable with low noise (1%)
Hamming	-43	-6	preferable with moderate noise (5-10%)
Blackman	-58	-18	widest main-lobe

Figure 4.2. Spectral response of the four window functions and a its main characteristics: a) Boxcar, b) Hann, c) Hamming, and d) Blackman (Ao, T., Dolan, D., 2010).

All steps of data analysis (including choice of time window and window function) that are part of the algorithm can be repeated to obtain the clearest velocity history (if physically consistent). These parameters are chosen as a consequence of the assembled PDV system and its performance as opposed to defining a requirement in the PDV design.

The choice of window function depends on the perceived signal to noise ratio (SNR) of the signal, the beat frequency/velocity expected and therefore the time/velocity resolutions deemed ideal. The objective is to maximise the spectral response of the signal in the STFT. A perfect raw signal would have a window function applied that: has a: narrow

main-lobe (frequency peak is well defined); low first side-lobe (a high suppression of noise); rapid descent off the rest of the side-lobes (Ao, T., Dolan, D., 2010). The Boxcar window should be used when the SNR is high but there are two frequency peaks really close to each other. With Boxcar those two peaks will not interfere (unlike with a Blackman window whose side-lobe is wide). However, the Boxcar window contains the highest spectral leakage (high side-lobe values). The Blackman window is the best at suppressing noise near the frequency peaks and indicated for a low signal to noise ratio.

The window choice typically used per direct user experience with PDV systems at ISP is the Hamming window, since it is the most adequate with signals around 10% of SNR, which is considered a fair estimate for a PDV system (Ao, T., Dolan, D., 2010). An estimate of DEM/FCTUC's assembly SNR must be done upon its assembly and first experiments, so the proper window function is chosen. The type of experimental setup affects the SNR and therefore the most proper window function.

Frequency resolution (directly related to velocity resolution) and time resolution (minimum response time for a velocity step (Dolan, D., 2010) determine the quality and fidelity of the velocity history. The data analysis tool, beat frequencies measured, SNR, time scale chosen, and sampling rate of the oscilloscope are some of the parameters that determine the velocity and time resolutions of PDV. The laser and detectors are chosen so that the linewidth of the laser and the rise time of the detector are not a factor.

Beat frequency is the first indicator of possible time resolution. Short time observations create uncertainty of the results in any measurement technique. Considering 3 wavelengths/periods of a wave is minimum to accurately measure its frequency (therefore velocity), the minimum number of wave periods (T) indicates the minimum time scale required for an accurate measurement (minimum τ is the time resolution).

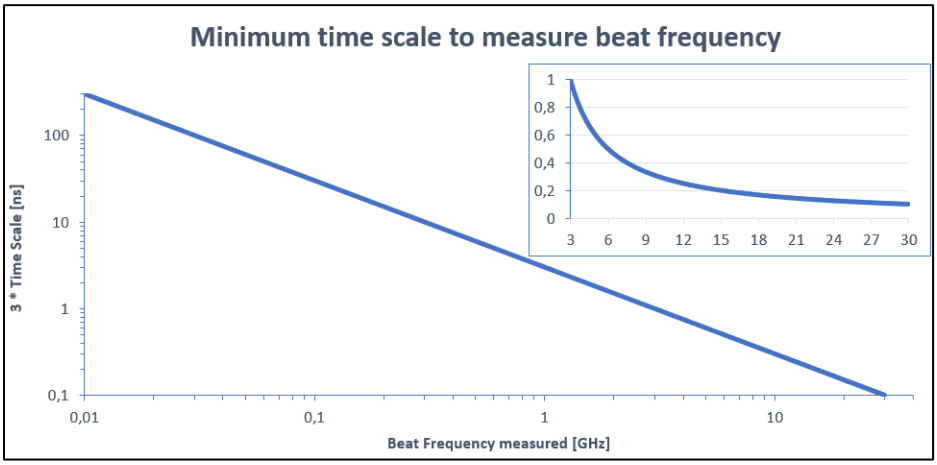

Figure 4.3. Minimum time scale required to measure the beat frequency accurately (logarithmic scale), with a detailed view for frequencies above 3 GHz.

The figure above is a visual representation of the importance of this factor. For low beat frequencies/velocity measurements (related to the initial moments of impact) a time resolution of sub-nanoseconds or nanoseconds will provide inaccurate velocity measurements. Analytically, the trade-off is represented by the uncertainty principle. (4.1) is the uncertainty principle, while (4.2) is its conversion to velocity precision/resolution (Δv) by adapting (3.1)

$$(\Delta f)(\tau) > \frac{1}{4\pi} \tag{4.1}$$

$$(\Delta v)(\tau) > \frac{\lambda_0}{8\pi} \tag{4.2}$$

Where Δf is the frequency precision/resolution and τ is the minimum time scale/time resolution. For a generation zero or one of PDV, a velocity precision of 5 m/s (0.006 GHz) requires a τ of ~ 12 ns for the STFT, and a τ of 1 ns will have a velocity precision of ~ 62 m/s (0.08 GHz). If time response is key in the analysis (to study the Von Neumann spike, for example), it comes at a sacrifice of velocity precision, and vice-versa.

This trade-off indicates why frequency-conversion of PDV (generation three configuration) is often employed (by upshifting the signal above 1 GHz) to avoid the “low-frequency shoulder” of 1 GHz frequency width. The image below depicts that shoulder and

how generation one PDV may poorly analyse low velocity changes and therefore some dynamic properties of the impact, though upshifting requires higher oscilloscope bandwidth.

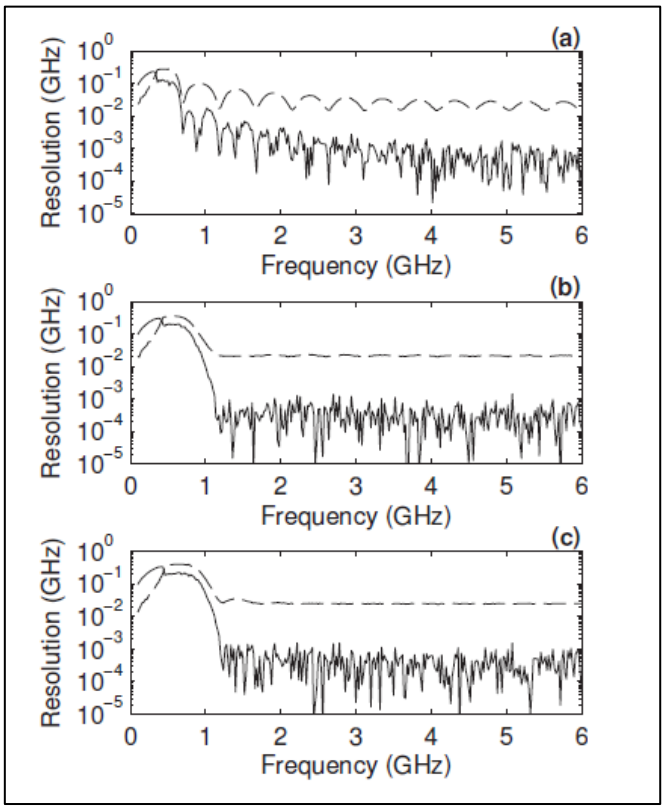

Figure 4.4. Resolution of a PDV signal with 10% noise using a a) Boxcar, b) Hamming, and c) Hann window functions. Visual representation of the "low frequency shoulder" of 1 GHz width. Solid lines indicate the accuracy of the measurement, dashed lines the precision/absolute resolution (Dolan, D., 2010).

The uncertainty principle on its own does not consider the signal's noise and the sampling rate of the oscilloscope. Also, it does not consider how peak defining (used in STFT) is better defined than the spectral width. Therefore, the velocity-time resolution trade-off is better represented by considering those factors and the noise in the raw signal (Dolan, D., 2010). The conversion from frequency to velocity uncertainty is again presented.

$$\Delta f = \sqrt{\frac{6}{f_s}} * \frac{\sigma}{\pi} * \tau^{-3/2}. \tag{4.3}$$

$$\Delta v = \frac{\lambda_0}{2} * \sqrt{\frac{6}{f_s}} * \frac{\sigma}{\pi} * \tau^{-3/2}. \tag{4.4}$$

Where f_s is the sampling rate of the oscilloscope and σ is the noise fraction in the signal.

Using a time scale of 1 ns (f_s = 40 GS/s and σ = 10%) comes at the expense of a velocity uncertainty of almost one seventh of the value for (4.2), 9.6 m/s, which should give reasonable results for some rapid velocity change features of the shock wave.

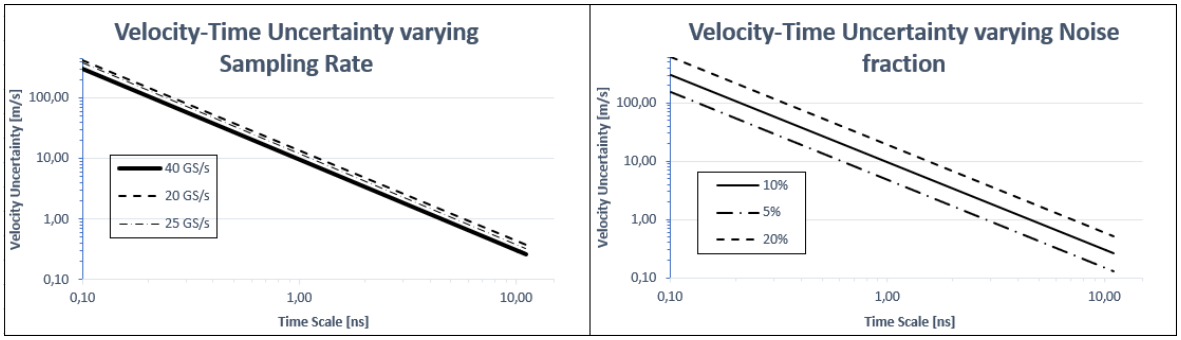

Figure 4.5. Evolution of the velocity-time resolution trade-off (in logarithmic scale) varying: a) the sampling rate of the oscilloscope (10% noise fraction), and b) the noise fraction of the signal (40 GS/s sampling rate).

To maximise the velocity-time resolution trade-off: the correct choice of time scale and window function must be done; the noise fraction estimated; the sampling rate must be as high as possible; and the possibility of upgrading into a generation three configuration PDV should be considered, provided the oscilloscope's bandwidth is above the upshifted frequency range. Equation (4.4) assumes that all data is treated equally (the case of the Boxcar window), therefore if a different window function is used the theoretical values will be more volatile to the noise fraction, since noise suppression varies according to what window function is used.

5. EXAMPLE OF EXPERIMENTS AT ISP USING PDV

As part of the experience gained in the ISP (Institute of Shock Physics) at Imperial College of London, there was the possibility of participating in experiments using the PDV technique thanks to Dr. Gareth Tear's study of type of failure in concrete samples previously subjected to radiative stresses via microwave. The study was presented at the 18th International Conference on Experimental Mechanics (ICEM18). This chapter presents the objectives of the study and particularly the ballistic impact experiments where PDV measurements were performed.

The study sought to clarify the type of damage on granular type material (such as concrete and others typically used in infrastructures) when subjected to ballistic impact, by developing an experimental method that identifies when local failure occurs and what type of damage it is. For high velocities and therefore high strain rates the most commonly used models of fracture and of granular flow (or models based on those combinations) are unable to accurately depict the behaviour of high velocity impact. The results of the experimental method were compared to those numerical simulation approaches.

A 32 mm bore gas gun, from the Centre for Blast Injury Studies of Imperial College of London, was used to launch a sabot carrying a steel ball bearing. The bearing hit the sample of concrete (shaped as a disc) with speeds ranging from 120 to 160 m/s in a vacuum chamber. Using a spherical object prevents further tilt of the sample, since the gas gun did not guarantee that the bearing would be collinear with the sample's centre of gravity.

Two types of measurement were performed. One involved a phantom 7.2 high--speed camera, in order to capture the fracture pattern of the concrete sample by visible light. The other involved a PDV using a 1550 nm laser source of infrared light. The following design provides a top view of the experimental setup and the optical path of the high-speed camera and the PDV system. The different components are also specified.

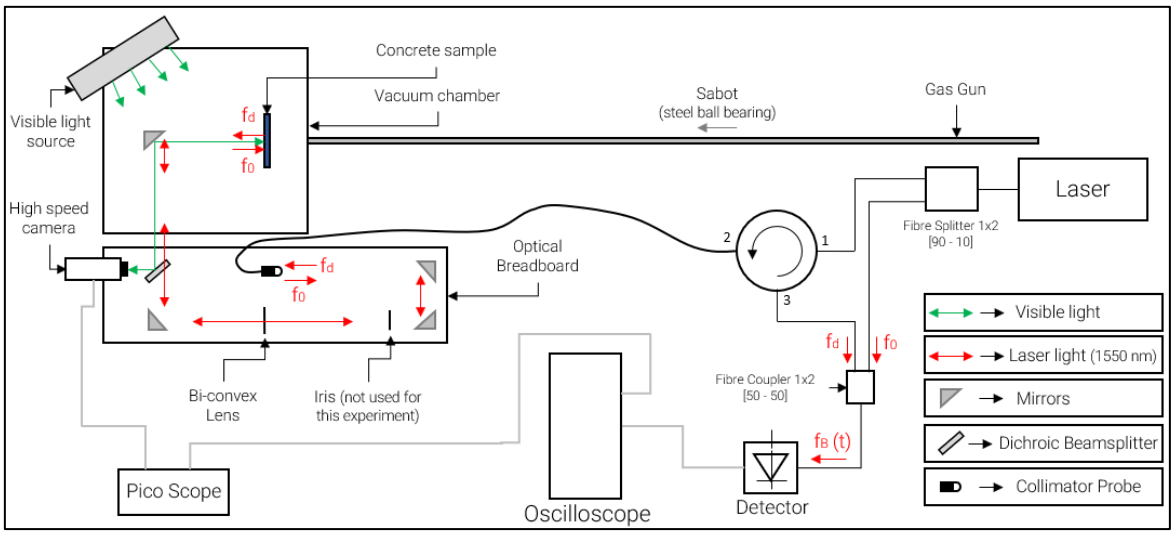

Figure 5.1. Top view schematic of the gas-gun experimental setup (except the components responsible for laser calibration between shots).

The visible light source, located above the vacuum chamber, provides sufficient light for the high-speed camera to record accurately the impact and consequent material fracture pattern until the mirror inside the chamber is also destroyed.

The PDV is a generation one type of configuration using one channel. A SFL1550S butterfly diode laser, with 1550 nm wavelength, single mode, 50 kHz linewidth, 40 mW optical power output, was used as the light source.

The optical path between the probe and the sample consists of mirrors to direct the light through a collimator lens (N-BK7 bi-convex lens) and is transmitted through a dichroic beam splitter. The OPL is defined by the focal length of the several lenses and the laser's coherence length in order to guarantee a good return signal. When light reaches the sample, it is Doppler-shifted and back-reflected to the probe by following the same optical path. The Doppler-shifted light is directed from the circulator's port 2 to 3 and to the MITEQ DR-125G detector with a 12 GHz bandwidth, with the electronic signal being analysed by a 20 GHz Tektronix oscilloscope (well above the required, as 160 m/s corresponds to a beat frequency of ~200 MHz). A STFT is run on and the velocity history is acquired.

A PicoScope was used to connect the trigger of the high-speed camera with the oscilloscope, so that the measurements of each equipment could be traced to the same timestamp, so data interpretation can be direct.

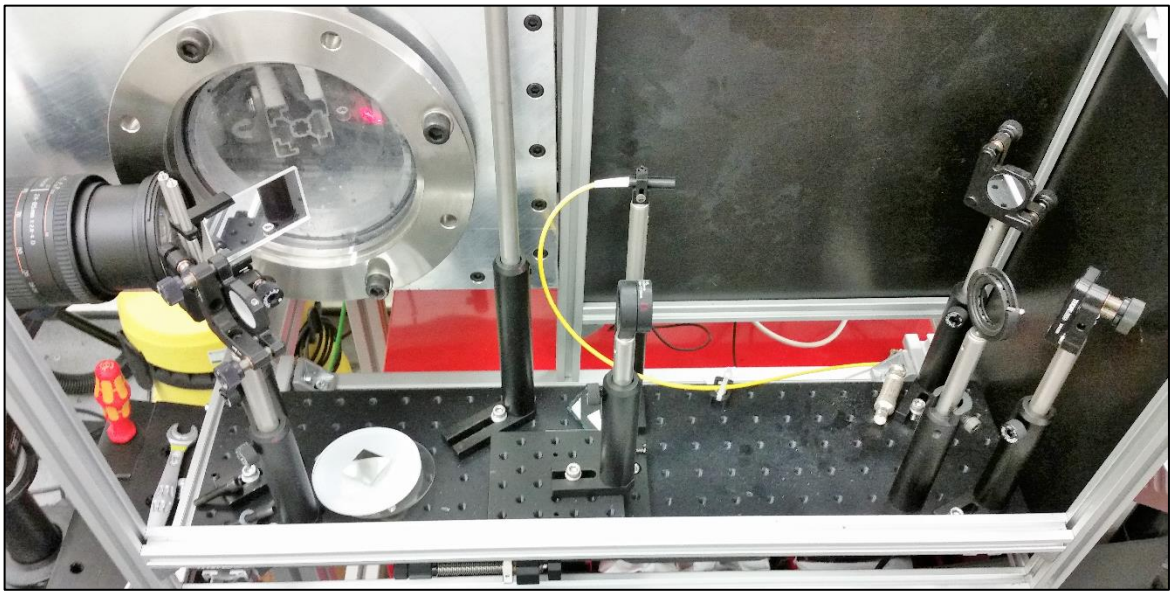

Figure 5.2. PDV and high-speed camera arrangement for gas gun impact measurements on a Thorlabs breadboard. The system is covered by black panels on its sides and several mounts allow for the components to be aligned vertically with the mirror and sample inside the vacuum chamber.

Bi-convex lenses focus light (within a specified range of wavelength) coming from both directions. The lens is AR coated to constrain the wavelength range. Within its focal length (200 mm for this design) the lens prevents loss of signal within the OPL.

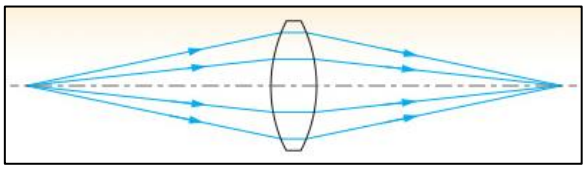

Figure 5.3. Geometry of a bi-convex lens and its manipulation of optical path.

The dichroic beam splitter allows for both measurement techniques to coexist. Light within a specified wavelength range (visible in this case) will be reflected by the dichroic's side facing the vacuum chamber, while light from another wavelength range (infrared in this case) is transmitted through it. The other side is AR coated so the transmission of infrared can occur on both directions, just like the bi-convex lens.

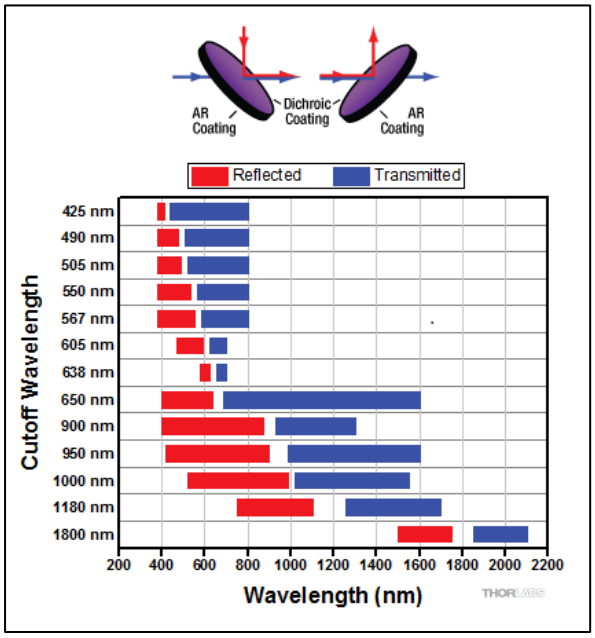

Figure 5.4. Geometry of a dichroic beam splitter and available wavelength ranges for each Thorlabs model.

To calibrate the exact point where the PDV probe is focused on the rear surface of the sample (relative to the high-speed camera) a phosphor card is used, along with a second laser, a low power visible light diode laser. This second laser is aligned with the PDV probe. Afterwards the high-speed camera takes a snapshot of the PDV probe position with the low powered laser. To calibrate the PDV's laser with the centre of the sample (the expected point of impact of the ball bearing), the gas gun is opened, and the second laser emits light through the gas gun's bore (left side of Figure 5.5). After alignment (between both lasers and the mirrors) the experiments are performed.

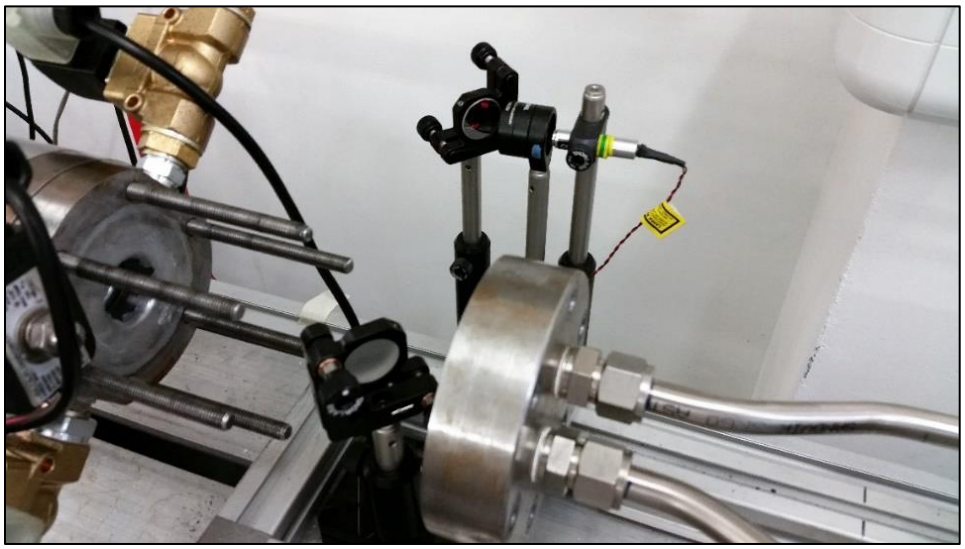

Figure 5.5. Use of a second laser through the gas gun's bore (between shots) to calibrate the PDV system.

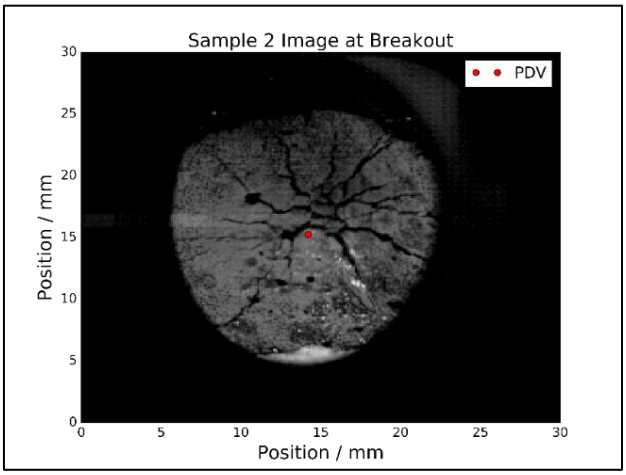

Figure 5.6. Image at breakout captured by the high-speed camera of a non-pre-damaged sample. Impact of ball bearing at 160 m/s, indicating the location of PDV probe laser focus.

Breakout is assumed as the moment when the PDV system detects the first movement of the sample. The velocity history (through the spectrogram after STFT) is presented below. A radial and bifurcating pattern of fracture can be observed in the sample (Tear, G. et al., 2018). Those fractures of coalesced material fragmented and were measured by the PDV with particle velocities up to 70 m/s.

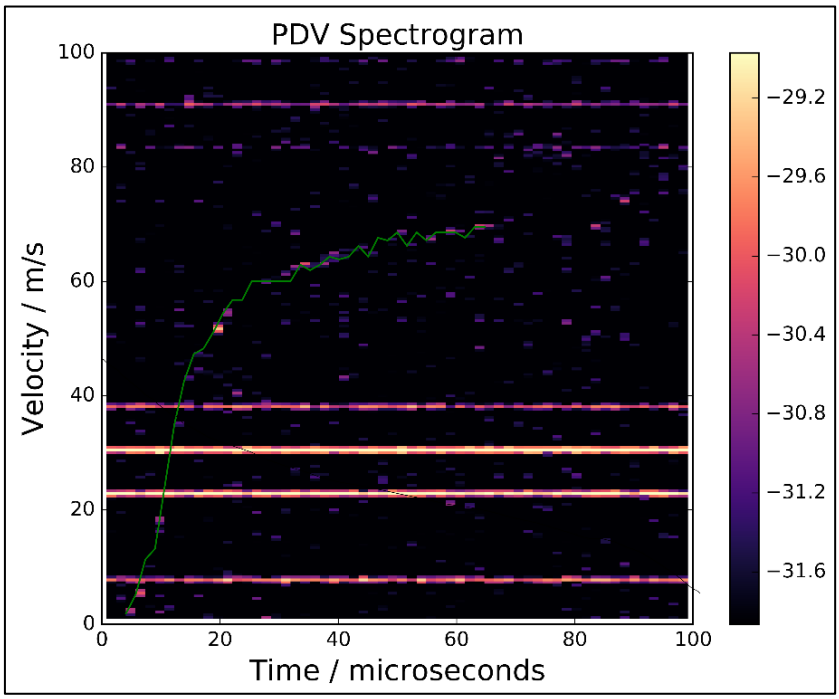

Figure 5.7. PDV spectrogram for sample number 2, with the velocity history highlighted in green as part of the data analysis process.

The spectrogram presents the result of the STFT, performed by a Python-based algorithm. The vertical scale on the right side quantifies in decibels the power spectrum of the data analysis. The horizontal lines that intersect the sample's velocity signal consist of harmonics of a 10 MHz (and multiples) digital noise. This might have been caused by the miscalibration of the oscilloscope's timing clock, which coincides with the observed noise. The final step in the algorithm consists of isolating the relevant velocity data, by means of the green trendline-type line in Figure 5.7 and export it into a velocity-time graph.

6. CONCLUSIONS

This work is aimed at designing a PDV system that fits the needs/requirements of DEM/FCTUC and its desired applications. The exercise of fitting those requirements to specifications for the PDV's components was done, justifying every step accordingly and having in mind the economical restraints, characteristics of designing a complex system of interdependent parts and the goal of obtaining accurate results that permit characterisation of the detonation process and the shock wave profile imparted on the sample.

The system designed could be above the available budget (at least for a 4 channel configuration), however it should guarantee a reliable signal capture while avoiding the investment of destruction of probes in experiments.

Although not much practical experience was possible during the stay at ISP, the one experiment followed from start to finish was described in chapter 5, its PDV system was properly understood, and its choice of butterfly diode laser shown to be a possibility for PDV systems.

A component that was not referred was the amplifier. If the measured signal is too weak for proper digitising (most likely case is in the round surface on the cylinder test) then either an amplifier after the photodetector or a photoreceiver (amplified photodetector) could be employed, but addition of noise by these components need to be minimised.

Also, not referred but important for PDV is the acquisition of certain equipment such as fibre cleaners, fibre cleaver, optical mounts and breadboards, testing equipment for observing the state of the fibres and other typical equipment when optics and electronics are involved.

The final step is to, upon having detailed information regarding the experimental setups (especially knowing the available space, desired position of the probes and the desired number of channels to field) fit those spatial requirements to the PDV design and the choice of fibre end for each experiment.

6.1. Next steps in DEM/FCTUC's PDV

Upon assembly of the PDV system and performing experiments to test the capabilities of the system and its performance regarding sources of noise, quality and optical power, there are two possible next steps, if there is available budget for those upgrades.

The first one is upgrading the system to a generation three configuration. Chapters 0 and 4 discuss this configuration briefly. The purchase of an AOFS or a tuneable frequency laser is necessary (for economical and practical reasons the second option is recommended). The new equation for beat frequency becomes (2.7).

At the cost of requiring a higher bandwidth oscilloscope and the second tuneable laser, an improved velocity-time resolution trade-off is achieved, baseline signal does not interfere with low velocity signal, features of low transients of velocity (elastic precursors, e.g.) are defined clearly and even directionality is possible to visualise. The need for a higher oscilloscope bandwidth means that this option should be seriously considered before actually assembling the generation one PDV.

The second upgrade is multiplexing PDV (MPDV), which is the current state of the art, with over a hundred channels fielded on experiments. To overcome the physical limitation of number of channels on oscilloscopes (and decreasing cost of the system per channel) and economic burden of buying over four, eight detectors, multiplexing is performed on the optical fibre using a multiplexer and fibres with enough difference in length between them to obtain signals delayed in time, so they can be distinguishable. There is still the limitation of having to manually crop the digitised signals and setting a new time stamp, so they can be analysed by the STFT. MTP/MPO connectors are economically feasible and are used in telecommunications. Over ten channels are available in a single cable for obtaining multiple signals, which also increases the velocity-time resolution trade-off by the square-root of number of signals used for the same measurement.

BIBLIOGRAPHY

Ao, T., Dolan, D., 2010, "SIRHEN : A Data Reduction Program for Photonic Doppler Velocimetry Measurements.", Sandia National Laboratories.

Barker, L. M., and R. E. Hollenbach. 1972. "Laser Interferometer for Measuring High Velocities of Any Reflecting Surface." *Journal of Applied Physics* 43 (11): 4669–75. https://doi.org/10.1063/1.1660986.

Deal, W. E., 1957, "Measurement of Chapman-Jouguet Pressure for Explosives.", The Journal of Chemical Physics 27 (3): 796–800. https://doi.org/10.1063/1.1743831.

Devore, D., Romero, V., Cata, B., Cata, I., Briggs, B., Holtkamp, D., Rigg, P., et al., 2009, "How Quality Fiber Optics and Connectors Affect PDV Data from PDV Experimenters.", 4th PDV Workshop

Dolan, D. H., 2010, "Accuracy and Precision in Photonic Doppler Velocimetry." *Review of Scientific Instruments* 81 (5). https://doi.org/10.1063/1.3429257.

Dolan, D. H., 2011, "Time-resolved velocimetry in dynamic compression research: VISAR versus PDV (HetV)". United States. doi: https://www.osti.gov/servlets/purl/1109431..

Findik, F., 2011. "Recent Developments in Explosive Welding.", Materials and Design 32 (3): 1081–93. https://doi.org/10.1016/j.matdes.2010.10.017.

Gustavsen, R. L., Sheffield, S., Alcon, R. R., 1998, "Detonation Wave Profiles in HMX Based Explosives." *AIP Conference Proceedings*, no. 836: 739–42. https://doi.org/10.1063/1.55674.

Holtkamp, D., 2006, "Survey of Optical Velocimetry Experiments - Applications of PDV, a Heterodyne Velocimeter." 2006 International Conference on Megagauss Magnetic Field Generation and Related Topics, Including the International Workshop on High Energy Liners and High Energy Density Applications, MEGAGAUSS, 119–28. https://doi.org/10.1109/MEGAGUSS.2006.4530668.

Howes, T., 2001, "Explosive Welding", Accessed on 14 of June 2018, in: http://www.ansatt.hig.no/henningj/materialteknologi/Lettvektdesign/joining%20methods/joining-welding-explosive%20welding.htm

Jackson, S., 2014, "Scaled Cylinder Test Experiments with Insensitive PBX 9502 Explosive,", 10.

Jensen, B. J., Holtkamp, D. B., Rigg, P. A., Dolan, D. H., 2007, "Accuracy Limits and Window Corrections for Photon Doppler Velocimetry." *Journal of Applied Physics* 101 (1). https://doi.org/10.1063/1.2407290.

Johnson, J. R., Taber, G., Vivek, A., Zhang, Y., Golowin, S., Banik, K., Fenton, G. K., Daehn, G. S., 2008, "Coupling Experiment and Simulation in Electro- Magnetic Forming Using Photon Doppler Velocimetry.", 3rd International Conference on High Speed Forming: 35–44. https://doi.org/10.2374/SRI08SP160.

Künzel, M., Nemec, O., Pachman, J., 2015, "Optimization of Wall Velocity Measurements Using Photonic Doppler Velocimetry (PDV).", Central European Journal of Energetic Materials 12 (1): 89–97.

Mendes, R., Ribeiro, J. B., Loureiro, A., 2013, "Effect of Explosive Characteristics on the Explosive Welding of Stainless Steel to Carbon Steel in Cylindrical

Configuration." Materials and Design 51: 182–92. https://doi.org/10.1016/j.matdes.2013.03.069.

Multicom, "FBT vs PLC Fibre Optic Splitters – What's the difference?", Accessed on 20 of July 2018, in: https://www.multicominc.com/training/technical-resources/fbt-vs-plc-fiber-optic-splitters-whats-the-difference//

Newport, "Fiber Optics: How Fused Fiber Optic Couplers Work", Accessed on 02 of July 2018, in:

https://www.newport.com/medias/sys_master/images/images/h86/hb2/8797287088158/Tech-Note-26-How-Fused-Fiber-Optic-Couplers-Work.pdf

Pacareo, "Explosive Metal Welding – Technical Overview", Accessed on 14 of June 2018, in: http://pacaero.com/products/explosive-bonded-metals/explosive-metal-welding-technical-overview/

Podsednik, J., 2010. "Anatomy of a Transparent Optical Circulator." PDV Workshop; September 9-10, Sandia National Laboratories.

Robbins, D., Anderson, E., Anderson, M., Jackson, S., 2014, "Cylinder Test Characterization of an Ammonium Nitrate and Aluminum Powder Explosive.", 15th International Symposium on Detonation. http://public.lanl.gov/sjackson/papers/2015-AndersonAmmonal.pdf.

Stowe, David W. 1981. Fiber Optic Interferometer. US4380394, issued 1981.

Strand, O. T., Berzins, L., Goosman, D., Kuhlow, W., Sargis, P., Whitworth, T., 2004, "Velocimetry Using Heterodyne Techniques," 593. https://doi.org/10.1117/12.567579.

Strand, O. T., Goosman, D. R., Martinez, C., Whitworth, T. L., and Kuhlow, W. W., 2006, "Compact System for High-Speed Velocimetry Using Heterodyne Techniques." *Review of Scientific Instruments* 77 (8). https://doi.org/10.1063/1.2336749.

Strand, T, Bonner, R., Hester, D., Whitworth, T., 2008, "Factors to Consider When Choosing a Probe for PDV". 3rd Annual PDV Conference, United States. doi: https://www.osti.gov/servlets/purl/945699.

Tear, G., Cohen, A., Magnus, D., Sory, D., Proud, W. (2018), 385 "Damage characterisation for cement and concrete using microwave induced damage", Proceedings of The Eighteenth International Conference of Experimental Mechanics, 1 (doi: 10.3390/ICEM18-05418)

Tektronix. 2005. "Oscilloscope Selection Guide." Vol. 701.

Zhang, Y., Babu, S. S., Prothe, C., Blakely, M., Kwasegroch, J., Laha, M., Daehn, G., 2011, "Application of High Velocity Impact Welding at Varied Different Length Scales." Journal of Materials Processing Technology 211 (5): 944–52. https://doi.org/10.1016/j.jmatprotec.2010.01.001.

ANNEX A

Enhanced PDV design presented in chapter 3.

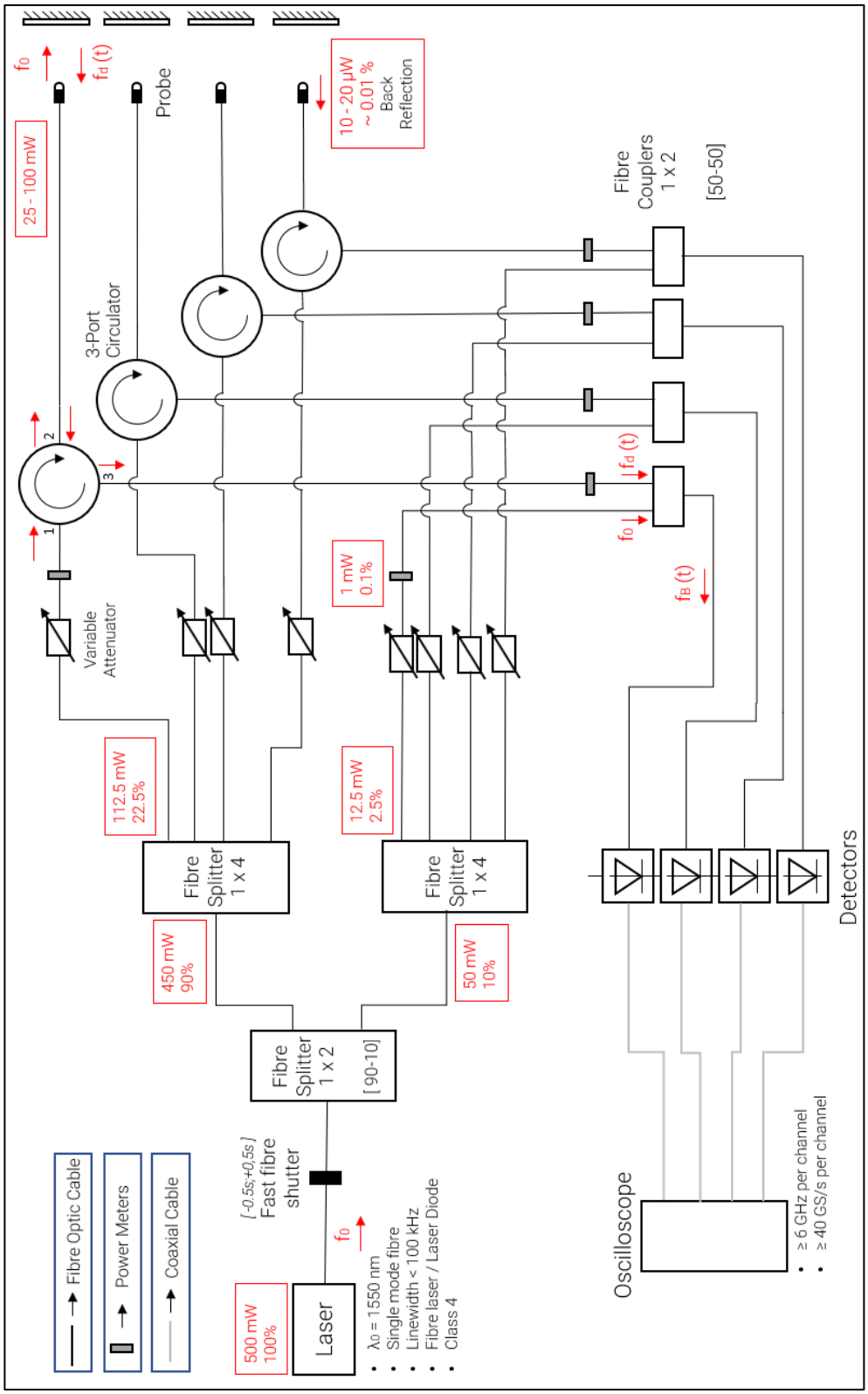

Figure A.1. Enhanced 4 channel PDV design for DEM/FCTUC, generation zero configuration.

Summary of all components selected, their specifications and examples of suitable components for those specifications. All components are selected for 1550 nm wavelength, continuous wave, SMF with FC/APC connectors. The type of fibre end is not summarised since its selection is dependent on factors outside this work's scope.

Price estimates do not account for taxes or negotiations of large orders, so prices most likely vary. Prices were consulted/estimated on September of 2018.

Table A.1. List of components selected, specifications and suitable models.

Component	Specifications	Examples of Models	Price Estimate	Observations
Optical Fibres	• SMF, 1550 nm • 9 µm core diameter • 128 µm cladding diameter		3€ to 80€ (per metre)	Length not estimated but assumed to be under 100 m per Doppler-shifted arm and 10 m for reference arm.
Optical Fibre Connectors	• FC/APC		5€ to 10€ each	
Laser	• Power output ≥ 500 mW • Fibre laser or Laser Diode • Linewidth ≤ 100 kHz. • $\tau_{coh} \geq 3.17$ µs • $L_{coh} \geq 950$ m	• IPG ELR-1-LP-SF • NKT Koheras Boostik C15, E15 • Laserglow LLD-1550	8000 to 16000€	The minimum power output is in fact the necessary to deliver 25 – 100 mW to the fibre end and 10 – 20 µW back reflection from the probe.
1x2 Fibre Splitter	• 90%–10% split ratio • FBT type of construction • Maximum input power > 500 mW		7€ to 200€	99%-1% ratios are also feasible as long as losses are not higher.
1x4 Fibre Splitters	• 25% split ratio • FBT type of construction • Maximum input power > 450 mW		5€ to 250€	
2x1 Fibre Couplers	• 50%–50% split ratio • FBT type of construction • Maximum input power > 1 mW		5€ to 200€	Other ratios are feasible (if losses not higher). Max input power depends on chosen optical power in the reference arm.
Variable Optical Attenuators	• Manual actuation		90€ to 150€	

	• Collimator VOAs • Maximum input power > 112.5 mW			
Fibre Shutter	• Time range: [-0.5s; +0.5s] • Maximum input power > 500 mW	• Thorlabs SOA1013SXS	1800€	Used if Class 4 laser is selected.
Optical Circulators	• 3-Port Inline Circulator • Maximum input power > 112.5 mW	• FS-PICIR-3-CL-X • Thorlabs 6015-3-APC	120€ to 620€	Virtually inexistent loss expected, due to extinction ratio and directivity
Photodetectors	• InGaAs construction • Bandwidth > 10 GHz • Maximum power input > 1 mW	• MITEQ DR-125G-A • Newport 1544-A	1800€ to 5000€	Max input power depends on chosen optical power in the reference arm and back-reflected power.
Oscilloscope	• Bandwidth per channel ≥ 6 GHz • Sampling rate per channel ≥ 40 GS/s • Record Length > 4 Mpts	• Tektronix DPO70604C, MSO64 • Keysight DSOS604A, DSOS804A • Teledyne LeCroy WaveMaster 806Zi-B	7000€ to 48000€	Assuming it is bought on used market, so price estimate is around half the value for a new one.

ANNEX B

A 2 channel, generation one PDV design with the same requirements, budgeted at maximum 12000€ (value without the oscilloscope).

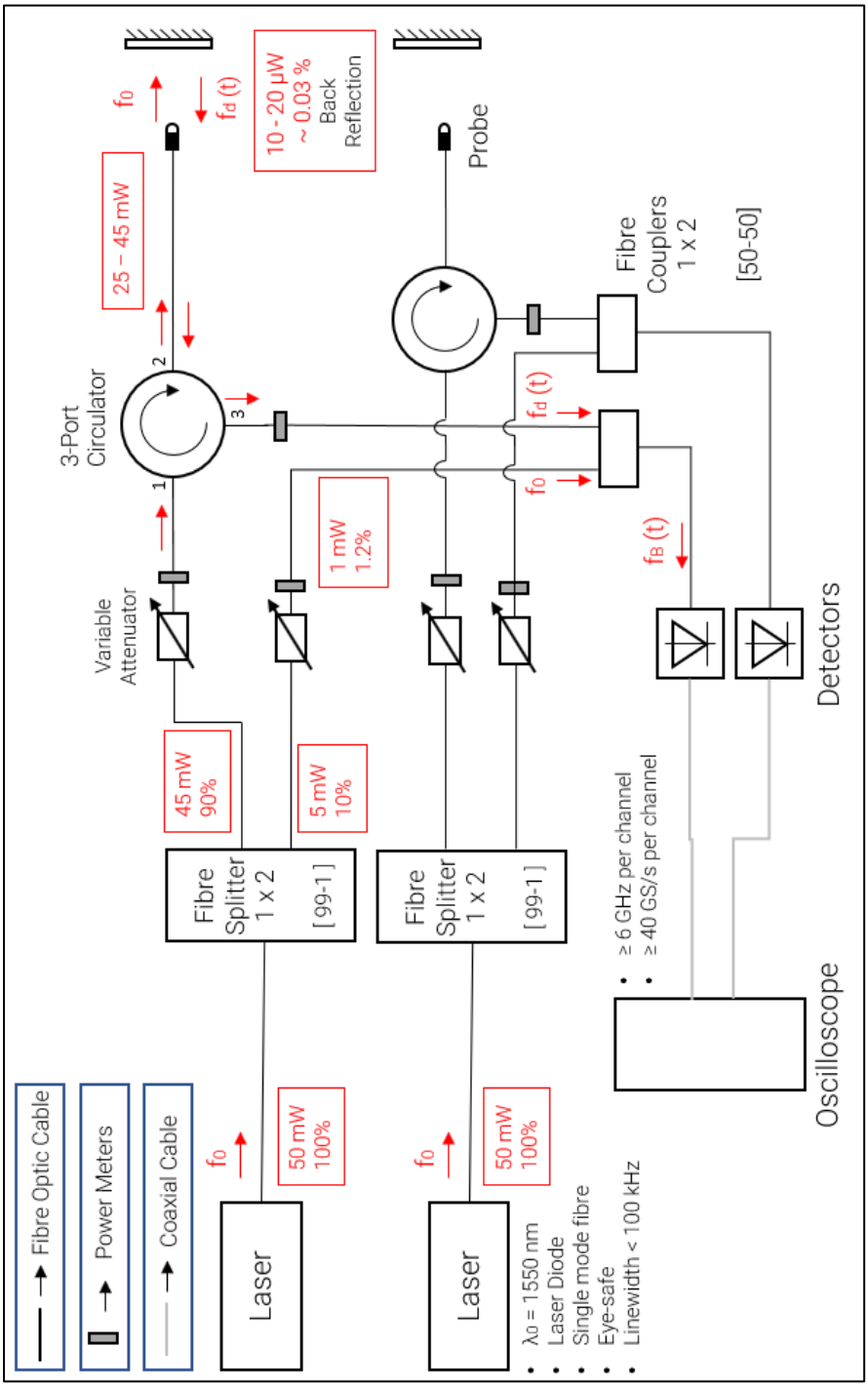

Figure B.1. PDV design for 2 channels, with a different laser used per channel.

The PDV design differs on the laser and 1x2 fibre splitters ratio. For economic reasons, a minimum output 50 mW butterfly laser diode per channel is selected. These types of butterfly LDs are suitable for single frequency, SMF operation, and some models comply with the linewidth requirements and power stability. The type of fibre end used here requires more attention as the leeway for its efficiency significantly lowers. 99 to 1 ratio 1x2 fibre splitters are used assuming their losses are similar to the 90 to 10 ratio models, since the laser output per channel is less than double of the proposed PDV. The type of fibre end assumed is a bare fibre end, 5 to 20 mm away from the surface (low cost solution).

An estimated budget is presented below. Once again it does not account for taxes or negotiations of large orders. Prices were consulted/estimated on September of 2018.

Table B.1. Estimated budget for a 2 channel PDV design.

Component	Quantity	Manufacturer	Model	Price Estimate
Optical Fibre + Connectors	100 m of SMF 9-128, FC/APC – FC/APC	Fibertronics	PC-II9S3YV01M	3€/m → 300€
Laser	2	Pure Photonics	PPLC200	5000€
1x2 Fibre Splitters 99-1	2	Fibertronics	DWC-1X2-0199-900	40€
2x1 Fibre Couplers 50-50	2	Fiberstore	FBT-SM-FC-D1x2	17€
Variable Optical Attenuators	4	Fiberstore	VOA-B-FS	400€
Optical Circulators	2	• Fiberstore	FS-PICIR-3-CL-X	220€
Photodetectors	2	• Thorlabs	DX20AF	3600€
			TOTAL PRICE →	9600€

ANNEX C

In a PDV system, the choice of optical components must account for optical power losses. The values of those losses are provided in the component's data sheet. Despite being theoretical values (or experimental under different conditions from the user) they properly indicate the required laser output.

Most values in data sheets are displayed in the decibel scale. A more intuitive unit is percentage and therefore the corresponding power loss on the output compared to the input value. The conversion of gain/power in decibels (G_{dB}) to the ratio between the measured power (P_{meas}, output) and a reference power (P_{ref}, input) is:

$$G_{dB} = 10\log_{10}\left(\frac{P_{meas}}{P_{ref}}\right).$$

$$\frac{P_{meas}}{P_{ref}} = 10^{(G_{dB}/10)}. \tag{C.1}$$

Some sources are quantifiable (Q) while others are non-quantifiable (NQ) when error is not systematic. For example, the loss of power on an optical fibre due to excessive bending (altering the type of Fresnel reflection of the transmission) may occur, but it cannot be quantifiable without knowing several practical factors.

A loss budget is presented for only the Doppler shifted arm's segment from laser to the fibre end, as the locations where signal is travelling at optical powers over 1 mW. Some losses are virtually insignificant, as desired (indicated by "~ 0" in Table C.1). Some other parameters (temperature range, dust, polarization losses) are not described below but are relevant when detailing the full PDV design, just before acquiring the components. The power loss values are an average value of the examples given in Annex A and B. Some values are presented as a ratio (Attenuation of optical fibres for example) while others are presented as the absolute output power in decibels (extinction ratio of circulator, fibre shutter). The attenuation losses for the optical fibre per channel are only considered for the

longer length (usually between circulator port 2 and the fibre end, as all previous components are in the same area), assumed a maximum 200 m extension.

Table C.1. Loss budget for the proposed PDV system, in each Doppler-shifted arm and relevant component.

Component	Sources of optical power losses	Q / NQ	Power Loss (dB)	Power Loss (%)	P_{ref} (mW)	P_{meas} (mW)
FC/APC connectors	• Return Loss (back-reflection) • Insertion loss	• Q • Q	• -60 • -0.3	• ~ 0 • **7 (each connection)**	• - • Various	
Fast fibre shutter	Extinction ratio (efficiency of signal transmission)	Q	-60	0	500	500
1x2 Fibre Splitter (90% - 10%)	• Return Loss • Insertion Loss (maximum in one input)	• Q • Q	• -55 • **-0.65**	• ~0 • **14**	• 500 • **500**	• 500 • **430**
1x4 Fibre Splitter	• Return Loss • Insertion Loss (maximum in one input)	• Q • Q	• -50 • **-5.7**	• ~ 0 • **73**	• 430 • **430**	• 430 • **116**
Circulator	• Return Loss • Directivity (Port 1 to 3) • Extinction Ratio / Isolation • Insertion Loss (Port 1)	• Q • Q • Q • Q	• -50 • -50 • -40 • **-0.8**	• ~ 0 • ~ 0 • ~ 0 • **17**	• 116 • 116 • 116 • **116**	• 116 • 116 • 116 • **97**
Optical Fibre from Port 2 to fibre end (200 m)	• Attenuation due to scattering, absorption • Excessive Macro/Micro Bending	• Q • NQ	• -0.07 • -	• 1.6 • -	• 97 • -	• 96 • -

This optical power loss budget does not guarantee the maximum value of 100 mW at all probes. The 96 mW power would be lower thanks to the consecutive insertion losses at the FC/APC connectors. Values of this power budget (particularly the splitters) should be checked for each of the final choices for components and confirmed with their manufacturers.